SAN Architecture

In an enterprise environment, hosts access the block storage system over a dedicated high-performance network called a SAN. A SAN provides storage consolidation and enables shared centralized data management.

A LUN is a range of blocks that is provisioned from a pool of shared storage and presented to the server as a logical disk. The LUN appears as a physical storage drive to the server operating system. The host operating system partitions, formats, writes to, and reads from the LUN, just as from any locally attached disk.

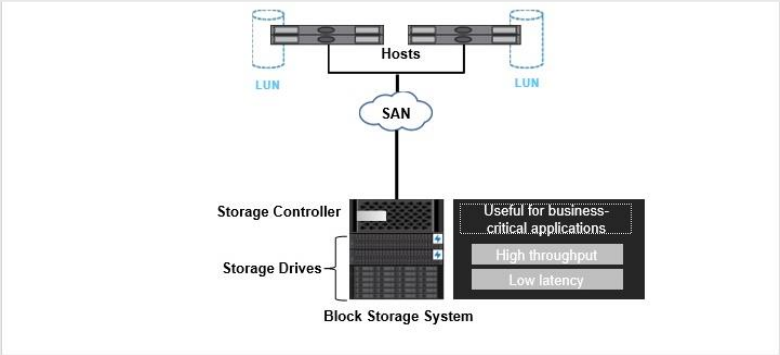

SAN is the most common storage networking architecture used by enterprises for business-critical applications that must deliver high throughput and low latency.

Block Virtualization

With the block virtualization technique, you create a storage pool with resources from multiple network devices and make them available as a single central storage resource. The virtualization entity provides the virtual storage to the servers in the form of a virtual disk.

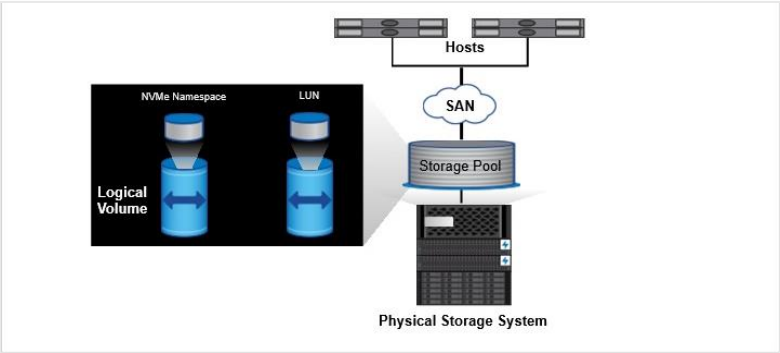

Data that is stored in a SAN environment is stored in a logical container that represents a SCSI disk. The container is called a LUN.

An NVMe namespace is a quantity of NVMEM that can be formatted into logical blocks. Namespaces are the equivalent of LUNs for FC and iSCSI protocols and can be accessed using the NVMe/FC protocol.

This technique, used in many SANs, improves productivity, resource utilization, and

manageability.

SAN Protocols

In SAN environments, storage systems are targets that have storage target devices-LUNs and namespaces.

LUN

In storage systems, hosts communicate with LUNs across an FC switched fabric network that uses the FC protocol. Hosts communicate across an Ethernet network that uses the iSCSI protocol. Hosts also communicate across a converged Ethernet network that uses either the FCoE protocol or the iSCSI protocol. InfiniBand, or IB, which is commonly used in high-performance computing environments, can also be used. Serial Attached SCSI (SAS) is a point-to-point protocol and allows for much higher speed data transfers.

In these cases, the transport portals carry encapsulated SCSI commands as the data transport mechanism.

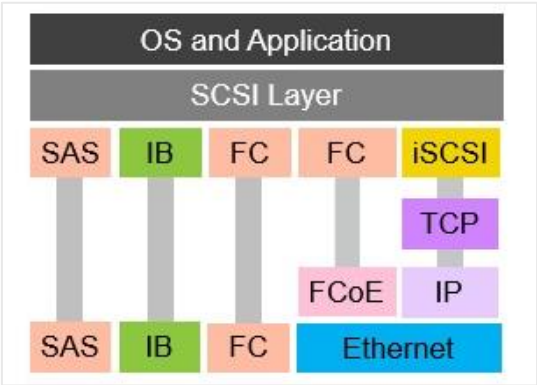

NVMe Namespaces

NVMe over Fabrics (or NVMe-oF) is the NVMe extension that effectively brings NVMe to the SAN marketplace. It defines and creates specifications for how to transport NVMe over various network storage transports. Hosts communicate with NVMe namespaces across an FC switched fabric network that uses the NVMe-oF protocol. The transport portals carry encapsulated NVMe commands as the data transport mechanism.

Other NVMe-oF transports include NVMe/InfiniBand, NVMe/RoCE, NVMe over iWARP, and more.

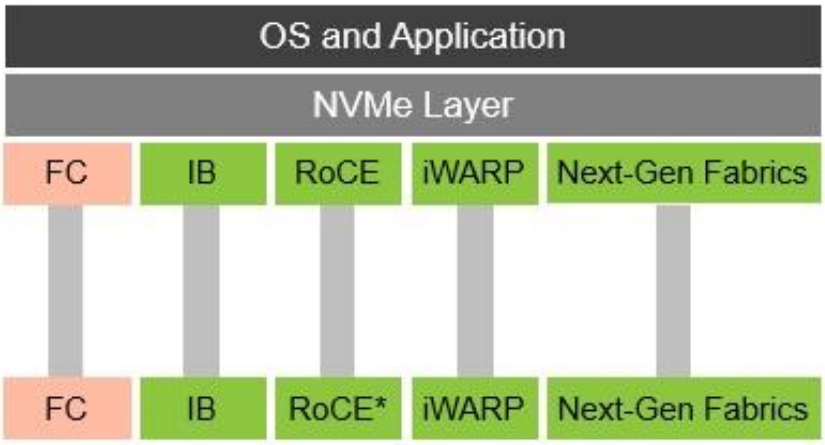

**ROCE: RDMA over converged Ethernet*

FC SAN

The Fibre Channel or FC protocol is the protocol that is used the most in a SAN environment. The main components in an FC SAN are the host bus adapter, the FC switches, the storage systems, and the cables.

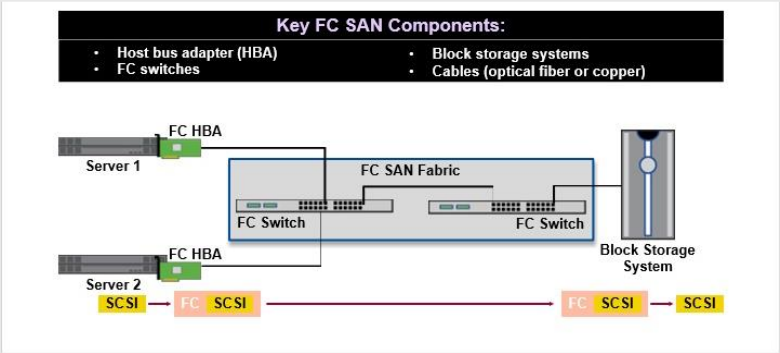

A host bus adapter, or HBA, is an expansion card that is installed on a host. If you want to use DAS to connect the storage system directly to the host, the HBA of the host and the storage system front-end port can be connected to each other.

In a SAN environment, the HBA of the host and the storage system front-end ports connect to one or more FC switches. These connections are either through copper cables or, more often, through optical fiber cables.

The FC switches in the SAN together form a logical space called a fabric.

The FC protocol wraps SCSI data and commands into FC frames and transmits them over the SAN. The FC switches route this traffic from the hosts to the storage system.

Fibre Channel or FC protocol is a high-speed low latency network technology that is primarily used for storage networking.

iSCSI SAN

The main components for an iSCSI SAN system are the iSCSI initiators, the iSCSI targets,

and the IP network itself.

- An iSCSI initiator is a server that initiates read/write requests over an IP network.
- iSCSI targets are storage devices that are iSCSI-enabled and have an iSCSI port.
- A target responds to an initiator's request over the IP network by sending data and responses.

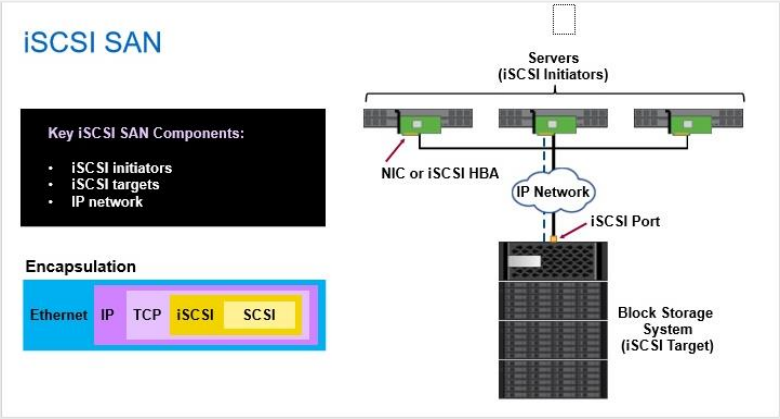

An iSCSI initiator can connect to the network through a regular NIC, in which case iSCSI processing is performed though software on the initiator. This action puts a processing burden on the initiator. Alternately, an adapter capable of iSCSI processing can be installed on the initiator.

The iSCSI protocol wraps SCSI data into IP packets and transmits them over an IP network using TCP/IP.

FCoE SAN

Consider an infrastructure before using FCoE.

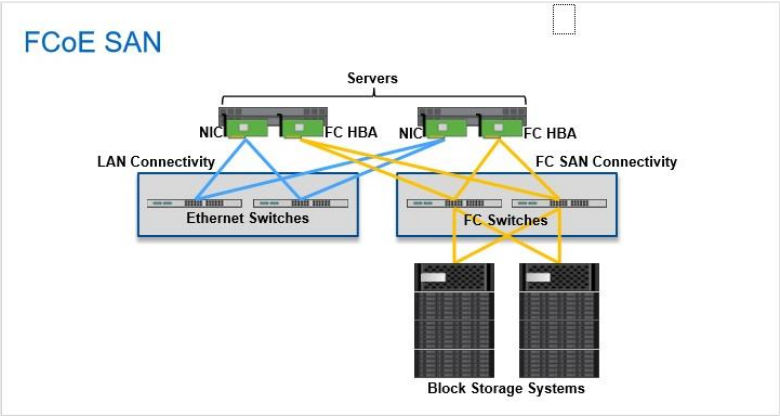

In a data center that has both Ethernet and FC SAN, the servers have multiple network cards. These cards include Ethernet NICs for connectivity to production and management networks, and HBAs for FC SAN connectivity. Different network types also mean that there are dedicated Ethernet and FC switches in the environment. Such environment involves complex cabling as well.

An FCoE SAN can transmit both Ethernet and FC data.

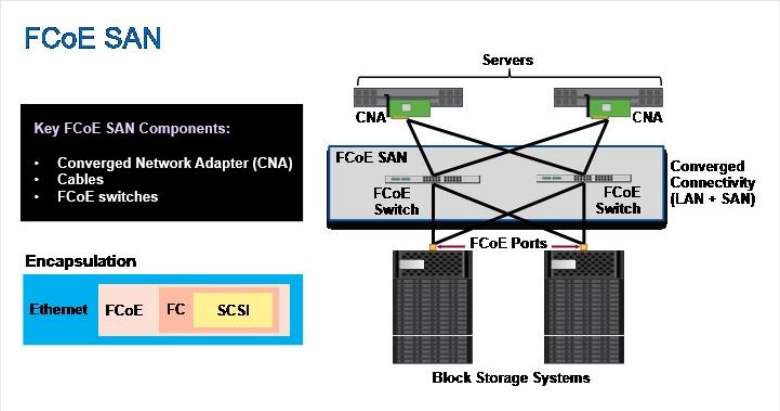

A generic FCoE SAN environment is made up of FCoE switches. A converged network adapter, or CNA, is installed on the servers. By using a CNA on a server and FCoE switches, both Ethernet and FC traffic get consolidated on the same Ethernet infrastructure. This eliminates the need to have separate adapters, cables, and switches for Ethernet and FC traffic. FCoE SAN thus eliminates the need for two different data center networks, which reduces network cost and complexity and improves network efficiency.

The CNA transmits FC data by wrapping it into Layer 2 Ethernet frames.

NVMe/FC SAN

Nonvolatile memory express (or NVMe) defines access protocols and architectures for connecting local nonvolatile storage to computers and servers. NVMe/FC is the NVMe extension that defines and creates specifications for how to transport NVMe over FC. NVMe/FC can coexist on the same hosts, fabrics, and storage that use FC. NVMe/FC can use the same data network components that FC uses for SCSI access to storage, enabling a smooth transition to new technology.

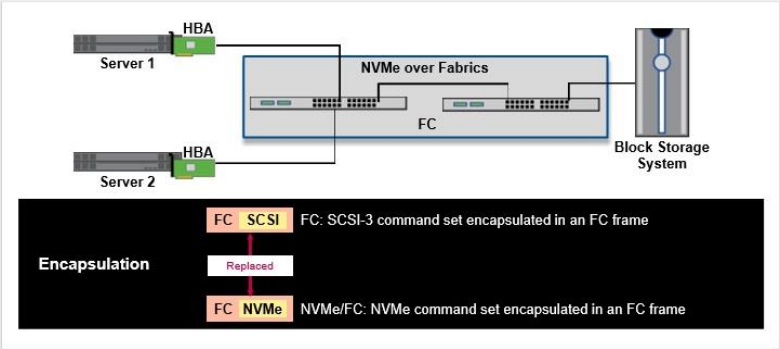

In NVMe/FC, the SCSI driver is replaced with the NVMe driver. The NVMe command set is encapsulated inside FC frames. The command set relies on common FC processes like zoning, and it coexists effortlessly with today's standard FC protocol, in which SCSI command sets are encapsulated in FC frames.

NAS

NAS is a distributed file system that enables users to access resources, such as volumes,

on a remote storage system, as if the resources were on the local computer system.

NAS provides its services through a client/server relationship. Storage systems that make their file systems and other resources available for remote access are called servers. A server has its own network address and provides file-based data storage to the computers that use the server resources. Computers that use server resources are called clients.

In an NFS environment, the server administrator determines which resources are available by exporting them. A client can request access to resources by issuing a “mount” command.

In an SMB environment, a client makes a request to the file server to access data in a share.

For both Windows and UNIX clients, after a remote file system is mounted into the local namespace, you read and write files to them as if the files and folders are local to your machine.

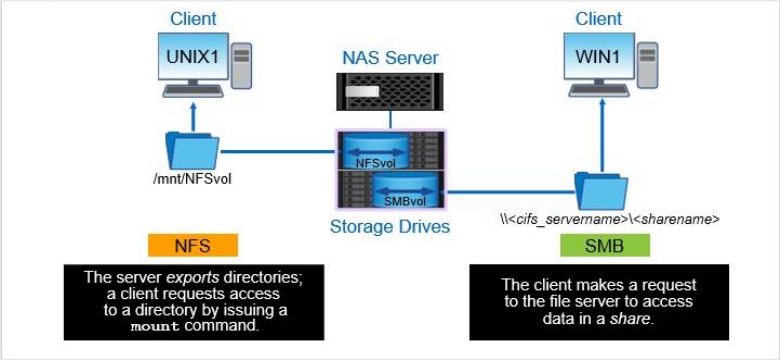

File Virtualization

File-based storage virtualization involves developing an abstraction layer between the file servers and the clients that access those file servers. The virtualization entity provides the virtual storage to the servers in the form of files and directories. Without file level virtualization, each NAS storage device and file server is physically and logically isolated.

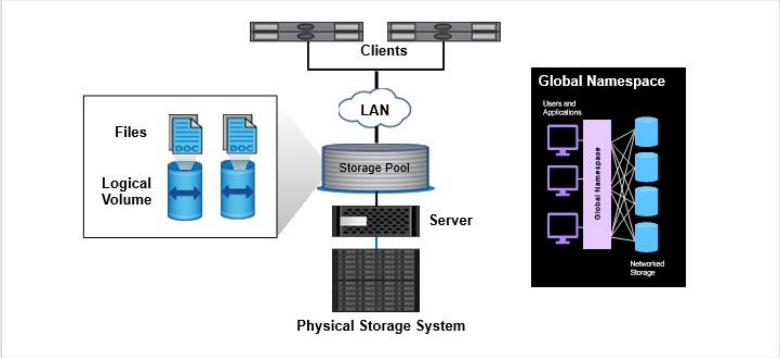

One way of implementing file virtualization is to abstract the physical location of data from the logical directory structure. This is achieved by building a global namespace to index files on network file servers and enabling access to file data via the logical namespace, regardless of physical location. A namespace is a logical grouping of volumes that are joined at junction points to create a single, logical file system. Even though data might move between physical file servers or NAS systems, you continue to access the data through the same logical path.

Instead of mounting every volume that contains a file of interest, NAS clients mount an NFS export or access an SMB *share*. The export or share represents the entire namespace or an intermediate location within the namespace.

NFS Protocol

NFS provides its services through a client/server relationship. The procedure in which the server makes file systems available to clients is called exporting. In this example, the storage administrator exports the NFSvol with read/write permission.

For the client to access the exported file system, the client must mount to the file system. In this example, the UNIX1 client sends a mount command to gain read/write permission to NFSvol.

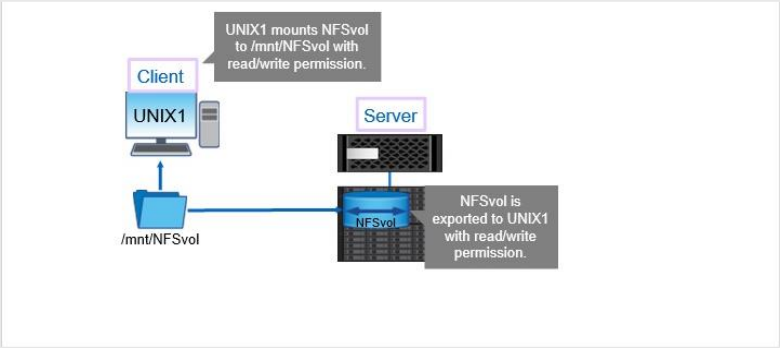

After a client mounts a file system that a server exports, users on the client can view and interact with the mounted file systems on the server, based on permissions.

SMB Protocol
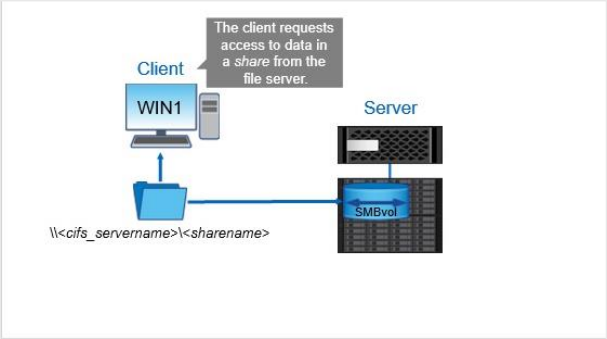
The Common Internet File System (or CIFS) is a dialect of Server Message Block (or SMB). SMB is an application-layer network file-sharing protocol that is used by the Microsoft Windows operating system. SMB enables users or applications to access, read, and write to files on remote computers such as a local computer.