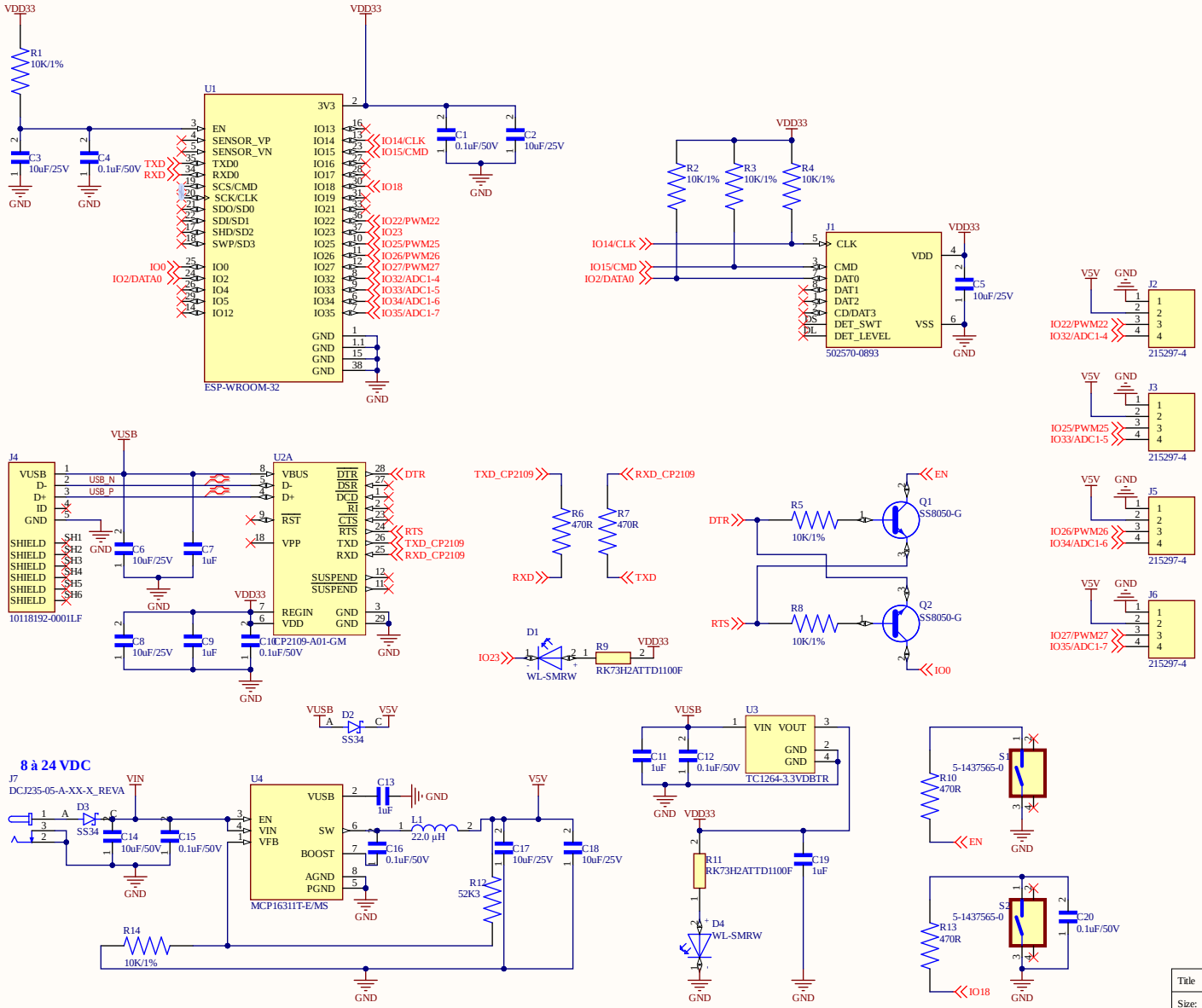

Title	UARM		CEGEP LIMOILOU
Size: Orcad B	Number: *	Revision: A	*
Date: 4/27/2021	Time: 4:35:20 AM	Sheet * of *	*
File: Z:\TSO_project\electronics\uARM.SchDoc			*

Altium

C2
C1
U1
R1
C3
C4
D1
R3
R7
R8
Q2
Q1
R5
S1
S2
C5
R10
C20
R13
J6
J2
J3
J5
J7
D3
C12
U3
C11
C19
D4
R11
C13
U4
R12
R14
C15
C16
C14
L1
C17
C18
J1
R3
R4
R2
R6
D2
U2
C6
C7
J4
C10
C9
C8

PCB Edge