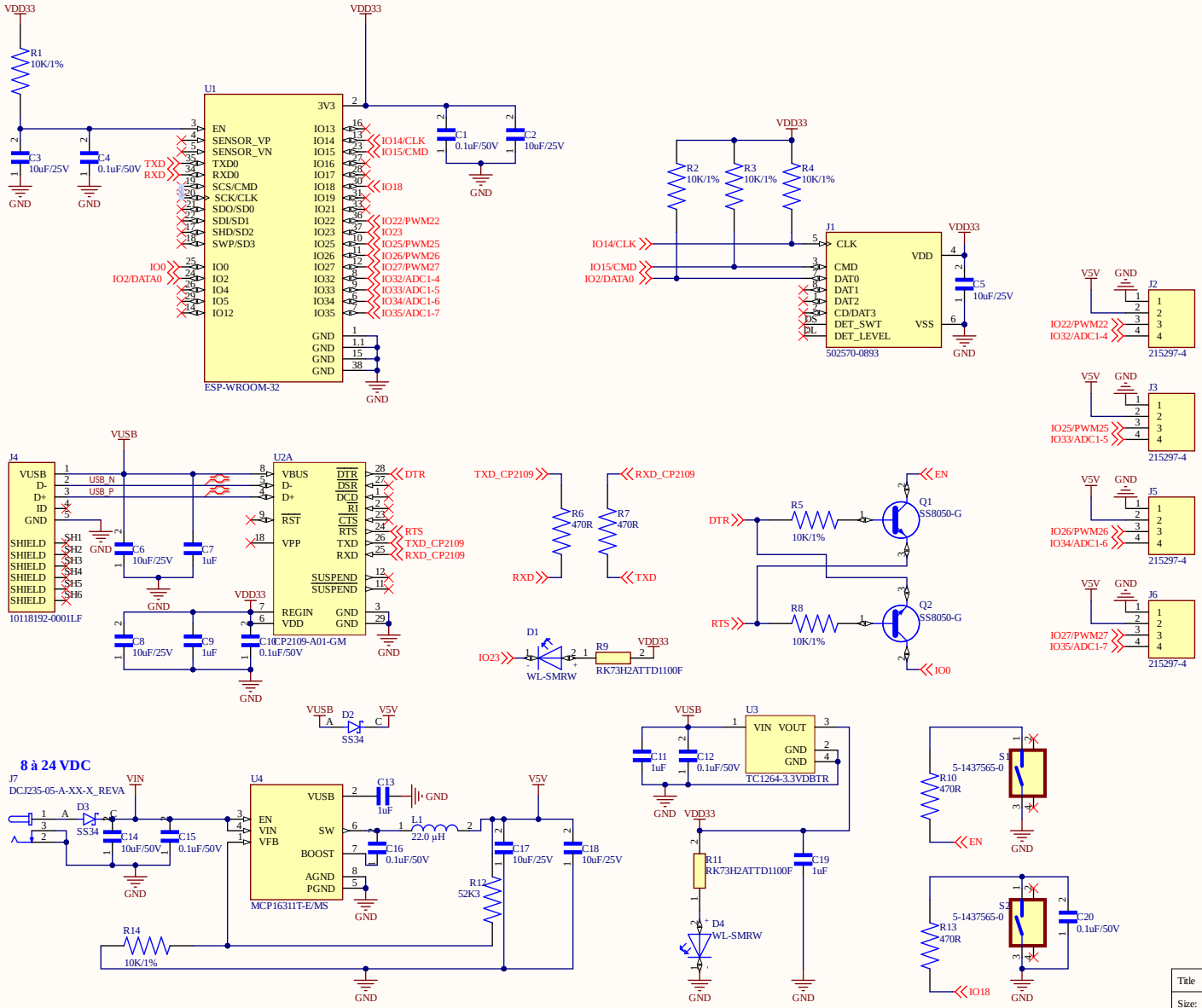

Title	UARM		CEGEP LIMOILOU
Size: Orcad B	Number: *	Revision: A	
Date: 4/25/2021	Time: 10:10:33 AM	Sheet * of *	
File:	Z:\TSO_project\electronics\v3\uARM.SchDoc		

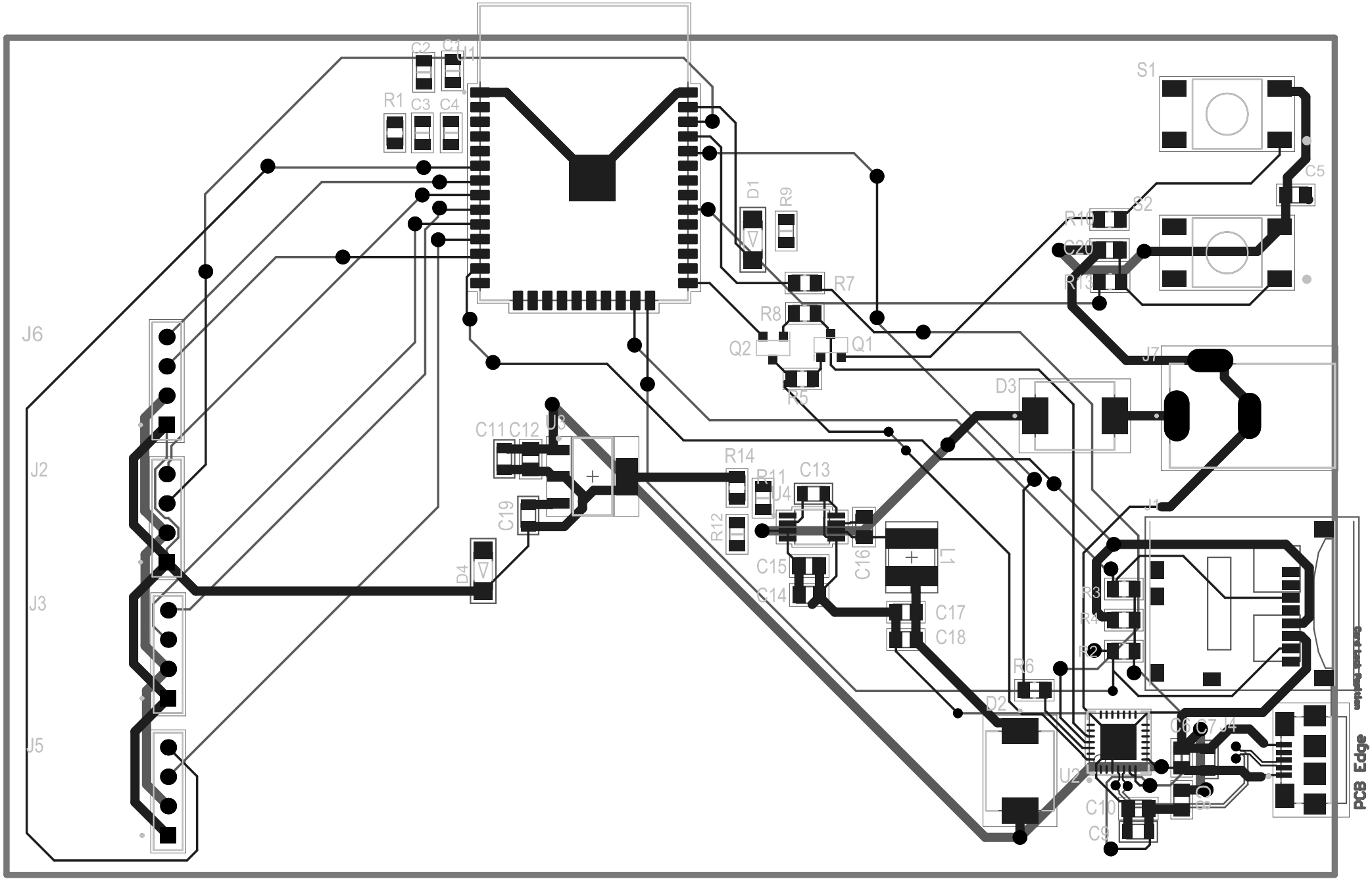
C2
C1
U1
R1
C3
C4
D1
R9
R7
R8
Q2
Q1
R5
S1
C5
S2
R10
C20
R13
J7
D3
J6
J2
J3
J5
C11
C12
U3
C19
D4
R14
R11
U4
C13
R12
C15
C14
C16
L1
C17
C18
J1
R3
R4
R2
R6
D2
U2
C6
C7
J4
C10
C9
PCB Edge