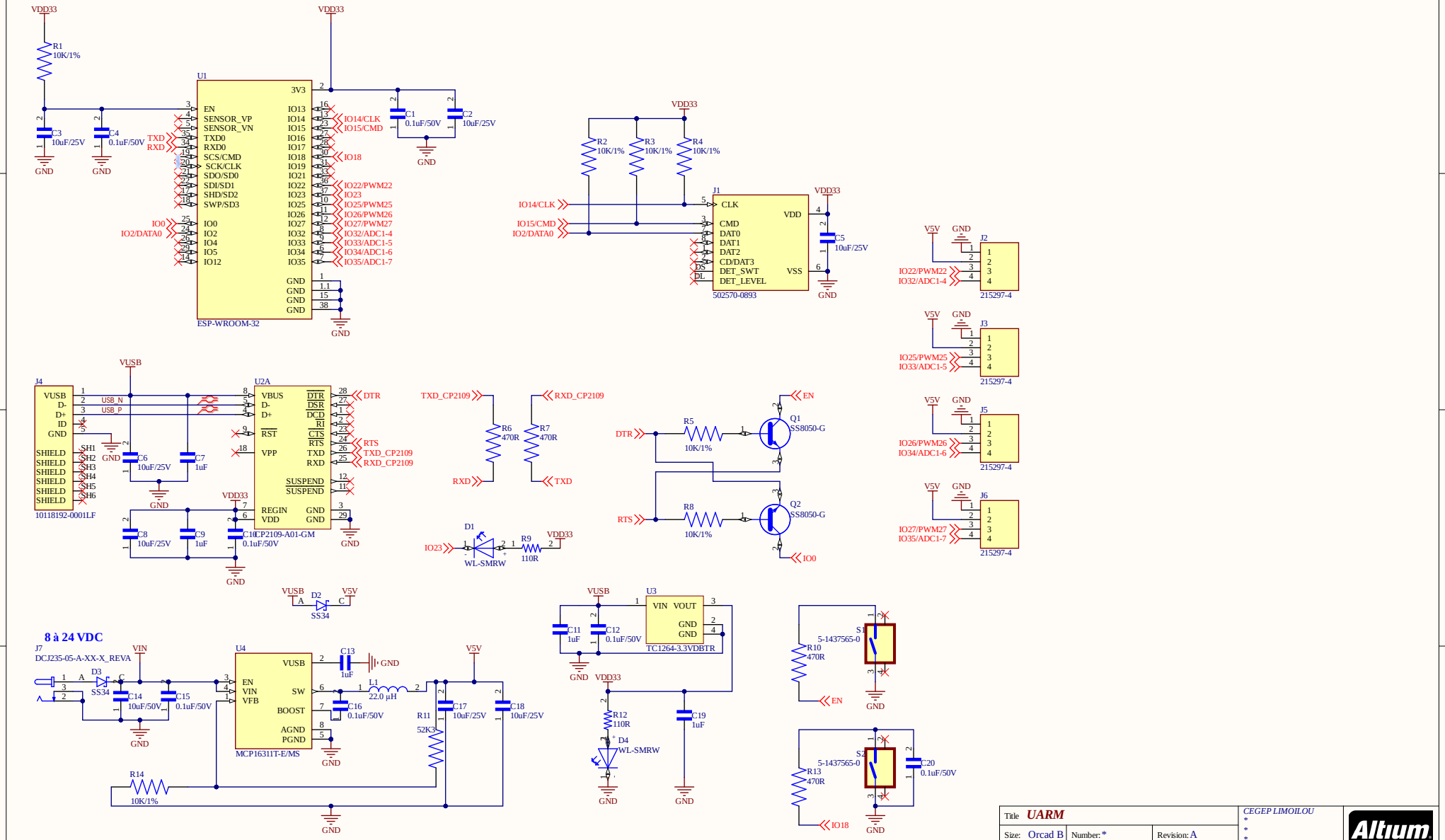

Title	UARM		CEGEP LIMOILOU
Size: Orcad B	Number: *	Revision: A	
Date: 4/22/2021	Time: 8:57:39 AM	Sheet * of *	
File:	Z:\TSO_project\electronics\v3\uARM.SchDoc		