# ABBREVIATIONS

| | | | |
|---|---|---|---|
| A.C - A/C | Asphalt concrete | F.O.C. | Face of Concrete |
| ACOUS. | Acoustical | F.O. FRM'G. | Face of Framing |
| ADJ. | Adjacent | F.O.F. | Face of Finish |
| ALUM. | Aluminum | F.O.P. | Face of Plywood |
| AGG. | Aggregate | F.O. SHT'G. | Face of Sheathing |
| APPROX. | Approximate | GA. | Gauge |
| ARCH. | Architectural/ Architect | GALV. | Galvanized |
| B.C. | Bottom of Conc./Curb | G.B. | Grab Bar |
| BLDG. | Building | GL. | Glass |
| B.O. | Bottom of | GSM. | Galvanized Sheet Metal |
| BLK. | Blocking/Block | GYP. | Gypsum |
| BM. | Beam | H.B. | Hose Bib |
| BTWN. | Between | HDWE. | Hardware |
| B.U.R. | Built-up Roof | H.M. | Hollow Metal |
| B.W. | Bottom of Wall | HORIZ. | Horizontal |
| CAB. | Cabinet | H.P. | High Point |
| C.B. | Catch Basin | HT. | Height |
| CEM. | Cement | I.D. | Inside Diameter |
| C.L. | Centerline | JAN. | Janitor |
| CLG. | Ceiling | JT. | Joint |
| CMU. | Concrete Masonry Unit | LAM. | Laminate |
| CNTL JT. | Control Joint | L.ARCH. | Landscape Architect |
| C.O. | Cleanout | LAV. | Lavatory |
| COL. | Column | LB. | Pound |
| CONC. | Concrete | LT. | Light |
| CONT. | Continous | MAX. | Maximum |
| CTR. | Center | MECH. | Mechanical |
| DEMO. | Demolition | MFR. | Manufacturer |
| D.F. | Drinking Fountain | MIN. | Minimum |
| DIA. | Diameter | MISC. | Miscellaneous |
| DIM. | Dimensions | MTD. | Mounted |
| DISP. | Dispenser | MTL. | Metal |
| DN. | Down | N | North |
| DWGS. | Drawings | (N) | New |
| (E) | Existing | N.I.C. | Not In Contract |
| EA. | Each | NOM. | Nominal |
| ELEC. | Electrical | N.T.S. | Not to Scale |
| ELEV. | Elevation | O.C. | On Center |
| EQ. | Equal | O.D. | Outside Diameter |
| e. | Equal | OPNG. | Opening |
| EQUIP. | Equipment | OPP. | Opposite |
| EX. | Existing | OPP. HD. | Opposite Hand |
| EXP. | Expansion | OZ. | Ounce |
| EXT. | Exterior | PERF. | Perforated |
| F.D. | Floor Drain | PL. | Plastic |
| FDN. | Foundation | P/L | Property Line |
| F.F. | Finished Floor | PLAS. | Plaster |
| FIN. | Finish | PLYWD. | Plywood |
| FL. | Floor | PR. | Pair |
| FLR. | Floor | | |
| FNDN. | Foundation | | |

# LOCATION MAP

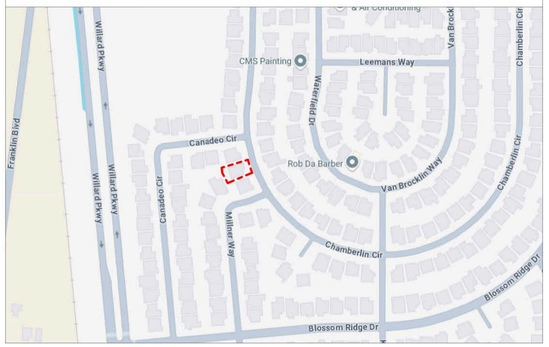


# ASSESSOR MAP

# ZONING INFORMATION

| | |
|---|---|
| PROJECT SITE | 4720 CHAMBERLIN CIR. ELK GROVE, CA 95757 |
| APN | 13217400120000 |
| PARCEL SIZE | 6,452 SQ FT |
| ZONING | RD- 5 LOW DENSITY RESIDENTIAL 5 DU / ACRE |
| MAX HEIGHT | 30 FEET (16 FT FOR ADUS >120 SQ FT) |
| BUILDING HEIGHT | (E) MAIN RESIDENCE: +/- 23' - 0" (NO CHANGES) |
| | (N) DETACHED ADU: 12' - 3 1/2" |
| LOT COVERAGE | 75% MAXIMUM |
| REQ'D FRONT SETBACK | 15 FEET MINIMUM OR SAME AS FOR PRIMARY STRUCTURE |
| REQ'D SIDE SETBACK | 5 FEET MINIMUM (4 FT FOR ADUS) |
| REQ'D REAR SETBACK | 15 FEET MINIMUM (4 FT FOR ADUS) |
| DESCRIPTION | **CONSTRUCT NEW DETACHED ACCESSORY DWELLING UNIT BEHIND THE EXISTING SINGLE-FAMILY HOME** |
| APPLICABLE CODES | CODES USED: 2022 CALIFORNIA BUILDING CODE<br>2022 CALIFORNIA RESIDENTIAL CODE<br>2022 CALIFORNIA MECHANICAL CODE<br>2022 CALIFORNIA PLUMBING CODE<br>2022 CALIFORNIA ENERGY CODE<br>2022 CALIFORNIA FIRE CODE<br>2022 CA GREEN BUILDING CODE<br>2022 CALIFORNIA ELECTRICAL CODE |

# SHEET INDEX

| SHEET NUMBER | SHEET NAME | SCALE |
|---|---|---|
| Architecture | | |
| A0.1 | Title Sheet | N/A |
| A0.2 | Notes | N/A |
| A0.3 | Site Plans | 1/8" = 1' - 0" |
| A1.1 | Floor Plan & Roof Plan | 1/2" = 1' - 0" |
| A2.1 | Sections | 1/2" = 1' - 0" |
| A3.1 | Elevations | 1/2" = 1' - 0" |
| A4.1 | Interior Elevations | 1/2" = 1' - 0" |
| A4.2 | 3D Views | N/A |
| A5.1 | Wall, Floor, & Roof Types | 3" = 1' - 0" |
| A8.1 | Window & Door Types & Schedule | 1/2" = 1' - 0" |
| RCP1 | Reflected Ceiling Plan | 1/2" = 1' - 0" |
| Title 24 Energy Compliance Forms | | |
| EC1.0 | Energy Compliance Forms | N/A |
| EC1.1 | Energy Compliance Forms | N/A |

# SYMBOLS

- REFERENCE LEVEL/POINT
- WALL, FLOOR AND ROOF TAG
- WINDOW TAG
- DOOR NUMBER
- DETAIL CALLOUT / SHEET LOCATION
- SECTION / SHEET LOCATION
- ELEVATION / SHEET LOCATION
- INTERIOR ELEVATION / SHEET LOCATION
- ROOM NUMBER
- SPRINKLER (IF APPLICABLE): PENDANT CONCEALED
- SPRINKLER (IF APPLICABLE): PENDANT SEMI-RECESSED
- SPRINKLER (IF APPLICABLE): SIDE WALL
- SPRINKLER (IF APPLICABLE): UPRIGHT RISER
- PROPERTY LINE
- CENTER LINE

# PROJECT DIRECTORY

| | | |
|---|---|---|
| OWNER | SHAMEKA SHAHEED<br>4720 CHAMBERLIN CIR.<br>ELK GROVE, CA 95757<br>PHONE: 310-738-1789<br>EMAIL: SHAHEED.SHAMEKA@GMAIL.COM | SHAMEKA SHAHEED |
| GC | TBD | |
| ARCHITECT | AS ARCHITECTURE, INC.<br>2110 K ST.<br>SACRAMENTO, CA 95816<br>PHONE: 510-883-3911<br>EMAIL: CHARLES@ASARCHITECTUREINC.COM | CHARLES GREEN |
| STRUCTURAL ENGINEER | SIMPLENGI<br>833 BANCROFT WAY<br>BERKELEY, CA 94710<br>PHONE: 415-754-3644<br>EMAIL: JON@SIMPLENGI.COM | RAY HOOFT |
| TITLE 24 - ENERGY CONSULTANT | TBD | |

# BUILDING INFORMATION

| | | | |
|---|---|---|---|
| UNITS | EXISTING | 1 | (E) SINGLE FAMILY HOUSE |
| | PROPOSED | 2 | (E) SINGLE FAMILY HOUSE +<br>(N) DETACHED ADU |
| OCCUPANCY | R3 | | |
| AREA | (E) MAIN RESIDENCE: | 1,450 NET SQ FT (NO CHANGES) | |
| | (N) DETACHED ADU: | 250 NET SQ FT | |
| HEIGHT | (E) MAIN RESIDENCE: | +/- 15' - 0" (NO CHANGES) | |
| | (N) DETACHED ADU: | 12' 3 1/2" | |
| LOT COVERAGE | EXISTING: | 31% | |
| | PROPOSED: | 36% | |
| NUMBER OF STORIES | (E) MAIN RESIDENCE | 1 (NO CHANGES) | |
| | (N) DETACHED ADU: | 1 | |
| SPRINKLERS | NO | | |
| NUMBER OF BASEMENTS | 0 | | |
| CONSTRUCTION | TYPE VB | | |

REVISIONS


**OWNER:**
**Shameka Shaheed**
4720 Chamberlin Cir. Elk Grove, CA 95757

**ARCHITECT:**
**AS Architecture Inc.**
2110 K St.
Sacramento, CA 95816
T: 510-883-3911
E: charles@asarchitectureinc.com


**NOT FOR CONSTRUCTION**

# 4720 Chamberlin Cir.

4720 Chamberlin Cir. Elk Grove, CA 95757

TITLE:

**Title Sheet**

| | |
|---|---|
| SET: | **Building Permit** |
| DATE: | **09/02/2025** |
| SCALE: | **As indicated** |
| DRAWN | **AS Architecture Inc.** |

SHEET NUMBER

A0.1

**GENERAL NOTES:**

1. THE CONTRACTOR SHALL VISIT THE SITE AND BE FULLY COGNIZANT OF ALL EXISTING CONDITIONS PRIOR TO SUBMITTING ANY PROPOSITIONS OR BIDS.IF ANY ASBESTOS, KNOWN MATERIALS CONTAINING ASBESTOS OR ANY MATERIALS CLASSIFIED BY THE EPA AS HAZARDOUS MATERIALS ARE DISCOVERED, THEN THE CONTRACTOR SHALL BE RESPONSIBLE TO COORDINATE WITH THE OWNER, AS REQUIRED, FOR THE REMOVAL OF THESE CONDITIONS, PRIOR TO THE BEGINNING OF THIS PROJECT. IF THE CONTRACTOR PARTICIPATES IN ANY PORTION OF THE REMOVAL PROCESS IN HIS COORDINATION WITH THE OWNER, THEN THE CONTRACTOR SHALL PROVIDE THE OWNER WITH A WRITTEN STATEMENT RELEASING THE OWNER OF ANY FUTURE LIABILITY FROM THE CONTRACTOR, HIS EMPLOYEES AND ANY SUBCONTRACTORS HIRED BY THE CONTRACTOR RELATED TO THIS WORK. THESE DRAWINGS AND SPECIFICATIONS DO NOT REPRESENT AN ASSESSMENT OF THE PRESENCE OR AN ASSESSMENT OF THE ABSENCE OF ANY TOXIC OR HAZARDOUS MATERIALS ON THIS PROJECT SITE. THE OWNERS ARE SOLELY RESPONSIBLE FOR SUCH AN ASSESSMENT AND SHOULD BE CONSULTED FOR ANY QUESTIONS THEREIN. IF THE CONTRACTOR DISCOVERS ANY TOXIC OR HAZARDOUS MATERIALS, AS DEFINED BY THE APPROPRIATE GOVERNING AUTHORITIES, IN THE COURSE OF HIS WORK, HE MUST NOTIFY THE OWNERS IN WRITING, AS PER THE GUIDELINES BY ALL GOVERNING AUTHORITIES. THE CONTRACTOR SHALL RESOLVE THE APPLICABLE REGULATIONS AND PROCEDURES WITH THE OWNER AT THE TIME OF DISCOVERY.

2. ALL WORK IS TO BE PERFORMED IN ACCORDANCE WITH ALL APPLICABLE CODES, LAWS, ORDINANCES AND LOCAL MUNICIPAL REGULATIONS AND AMENDMENTS RELATED TO THIS PROJECT, INCLUDING BUT NOT LIMITED TO: STATE OF CALIFORNIA ADMINISTRATIVE CODE TITLE 24; THE 2022 CALIFORNIA BUILDING CODE (CBC) INCLUDING THE 2022 CALIFORNIA RESIDENTIAL CODE; THE HISTORICAL BUILDING CODE; THE LATEST EDITION OF THE UNIFORM FEDERAL ACCESSIBILITY STANDARDS INCLUDING THE FEDERAL FAIR HOUSING ACT; THE 2022 CALIFORNIA FIRE CODE, THE 2022 CALIFORNIA ENERGY CODE, THE 2022 CALIFORNIA ELECTRICAL CODE, THE 2022 CALIFORNIA MECHANICAL CODE, THE 2022 CALIFORNIA PLUMBING CODE, THE 2007 NFPA 72 (FIRE ALARMS) AND THE 2022 NFPA 13/13R (SPRINKLERS). IT IS THE RESPONSIBILITY OF THE CONTRACTOR TO NOTIFY THE ARCHITECT AT ONCE UPON DISCOVERY OF ANY CONFLICTS OR DISCREPANCIES BETWEEN THE AFOREMENTIONED AND THE WORK CONTRACTED FOR THIS PROJECT OR A CHANGE OF AN APPLICABLE CODE OR STATUE BY LOCAL AUTHORITIES.

3.THE CONTRACTOR SHALL COORDINATE AND BE RESPONSIBLE FOR ALL WORK BY HIS SUBCONTRACTORS AND THEIR COMPLIANCE WITH ALL THESE GENERAL NOTES. THE CONTRACTOR SHALL IDENTIFY ANY CONFLICTS BETWEEN THE WORKS OF THE SUBCONTRACTORS, AS DIRECTED BY THESE DRAWINGS, DURING THE LAYOUT OF THE AFFECTED TRADES. THE CONTRACTOR SHALL REVIEW THESE CONDITIONS WITH THE ARCHITECT FOR DESIGN CONFORMANCE BEFORE BEGINNING ANY INSTALLATION.

4. THE CONTRACTOR SHALL FIELD VERIFY ALL EXISTING AND PROPOSED DIMENSIONS AND CONDITIONS. IT IS THE RESPONSIBILITY OF THE CONTRACTOR TO NOTIFY THE ARCHITECT AT ONCE UPON THE DISCOVERY OF ANY CONFLICTS OR DISCREPANCIES BETWEEN THE AFOREMENTIONED AND THE DRAWINGS AND SPECIFICATIONS OF THIS PROJECT. THE CONTRACTOR SHOULD FOLLOW DIMENSIONS AND SHOULD NOT SCALE THESE DRAWINGS. IF DIMENSIONS ARE REQUIRED BUT NOT SHOWN, THEN THE CONTRACTOR SHALL REQUEST THE DIMENSIONS FROM THE ARCHITECT BEFORE BUILDING ANY PART OF THE PROJECT, WHICH REQUIRES THE MISSING DIMENSIONS.

5. ANY CHANGES, ALTERNATIVES OR MODIFICATIONS TO THESE DRAWINGS AND SPECIFICATIONS MUST BE APPROVED IN WRITING BY THE ARCHITECT AND OWNER, AND ONLY WHEN SUCH WRITTEN APPROVAL CLEARLY STATES THE AGREED COST OR CREDIT OF THE CHANGE, ALTERNATIVE OR MODIFICATION TO THIS PROJECT. FOR INFORMATION, DRAWINGS OR OTHER DOCUMENTS, NOT SHOWN OR INCLUDED IN THE PERMIT OR CONSTRUCTION DRAWINGS OR SPECIFICATIONS, THE CONTRACTOR SHALL REQUEST THE MISSING INFORMATION, DRAWINGS OR DOCUMENTS FROM THE ARCHITECT BEFORE STARTING OR PROCEEDING WITH THE CONSTRUCTION AFFECTED BY THE MISSING INFORMATION, DRAWINGS OR DOCUMENTS.

6. THE INTENT OF THESE DRAWINGS AND SPECIFICATIONS IS TO PROVIDE THE DESIGN GUIDANCE FOR THE CONTRACTOR TO REASONABLY PLAN FOR ALL ITEMS NECESSARY FOR A COMPLETE JOB. IT IS THE RESPONSIBILITY OF THE CONTRACTOR TO PROVIDE ALL MATERIALS, LABOR AND EXPERTISE NECESSARY TO ACHIEVE A COMPLETE JOB AS INTENDED IN THESE DRAWINGS AND SPECIFICATIONS. THE CONTRACTOR IS FULLY RESPONSIBLE FOR ALL CONSTRUCTION MEANS, METHODS, TECHNIQUES, SEQUENCES, FINAL DIMENSIONS AND PROCEDURES FOR THE WORK SHOWN ON THESE DRAWINGS AND SPECIFICATIONS. IT IS THE CONTRACTOR'S RESPONSIBILITY TO ENACT THE AFOREMENTIONED IN COMPLIANCE WITH GENERALLY ACCEPTED STANDARDS OF PRACTICE FOR THE CONSTRUCTION INDUSTRY FOR THE TYPE OF WORK SHOWN ON THESE DRAWINGS AND SPECIFICATIONS.THE ARCHITECT RESERVES THE RIGHT OF REVIEW FOR ALL MATERIALS AND PRODUCTS FOR WHICH NO SPECIFIC BRAND NAME OR MANUFACTURER IS IDENTIFIED IN THESE DRAWINGS AND SPECIFICATIONS. THE CONTRACTOR SHALL VERIFY WITH THE ARCHITECT THE NEED FOR SHOP DRAWINGS OR SAMPLES OF MATERIALS OR PRODUCTS, WHICH WERE NOT IDENTIFIED IN THESE DRAWINGS OR SPECIFICATIONS, AS WELL AS ANY MATERIAL, PRODUCT OR EQUIPMENT SUBSTITUTIONS PROPOSED IN PLACE OF THOSE ITEMS IDENTIFIED IN THESE DRAWINGS AND SPECIFICATIONS.

7. IT IS THE CONTRACTOR'S RESPONSIBILITY TO VERIFY AND COORDINATE ALL UTILITY CONNECTIONS, UTILITY COMPANIES' REQUIREMENTS AND INCLUDE ANY RELATED COSTS ASSOCIATED WITH THIS RESPONSIBILITY IN THE PROPOSAL OR BID. THE CONTRACTOR IS ALSO RESPONSIBLE FOR WRITING LETTERS OF CONFORMATION REGARDING OPERATIVE AGREEMENTS FOR THIS PROJECT BETWEEN THE CONTRACTOR AND THE LOCAL FIRE DEPARTMENT; THE LOCAL WATER AGENCY; THE LOCAL NATURAL OR PROPANE GAS PROVIDER; THE LOCAL ELECTRICITY PROVIDER; THE LOCAL TELEPHONE SERVICE PROVIDERS; THE LOCAL CABLE TV PROVIDER; THE OWNER'S SECURITY SERVICE PROVIDER AND ANY UNNAMED UTILITY TYPE SERVICE PROVIDER. THE CONTRACTOR SHALL PROVIDE COPIES OF ANY SUCH AGREEMENTS TO THE ARCHITECT AND OWNER, IF REQUIRED OR REQUESTED.

**GENERAL NOTES (CONT'D):**

8. THE CONTRACTOR IS FULLY RESPONSIBLE TO ENACT THE APPROPRIATE SAFETY PRECAUTIONS REQUIRED TO MAINTAIN A SAFE WORKING ENVIRONMENT. THE CONTRACTOR SHALL ALSO INDEMNIFY AND HOLD HARMLESS THE OWNER, THE ARCHITECT, THEIR CONSULTANTS AND EMPLOYEES FROM ANY PROBLEMS, WHICH RESULT FROM THE CONTRACTOR'S PERFORMANCE OF THE WORK RELATED TO THE SAFETY OF THE CONSTRUCTION SITE.THE CONTRACTOR SHALL CARRY THE APPROPRIATE WORKMAN'S COMPENSATION AND LIABILITY INSURANCE, AS REQUIRED BY THE LOCAL GOVERNMENT AGENCY HAVING JURISDICTION FOR THIS ISSUE, AS WELL AS COMPLY WITH THE GENERALLY ACCEPTED INDUSTRY STANDARDS OF PRACTICE FOR A PROJECT OF THIS SCOPE. IT SHALL BE THE RESPONSIBILITY OF THE CONTRACTOR TO VERIFY WITH THE OWNER, IF HE WILL BE REQUIRED TO CARRY FIRE INSURANCE OR OTHER TYPES OF INSURANCE, AS WELL AS, MAKING THE OWNER AND/OR THE ARCHITECT ADDITIONALLY INSURED OH THEIR POLICIES FOR THE DURATION OF THE PROJECT. HE SHOULD ALSO ASSIST THE OWNER IN IDENTIFYING THE AMOUNT OF COVERAGE REQUIRED FOR THEIR CO-INSURANCE NEEDS.

9. THE CONTRACTOR SHALL MAINTAIN A CLEAN AND ORDERLY JOB SITE ON A DAILY BASIS. THE CONTRACTOR SHALL NOT UNREASONABLY ENCUMBER THE SITE WITH MATERIALS OR EQUIPMENT. THE CONTRACTOR SHALL NOT ENDANGER EXISTING STRUCTURES AND ANY NEWLY CONSTRUCTED STRUCTURE BY OVERLOADING THE AFOREMENTIONED WITH MATERIALS OR EQUIPMENT. THE CONTRACTOR SHALL PROTECT ALL EXISTING CONSTRUCTION TO REMAIN AND NEW CONSTRUCTION AFTER IT IS INSTALLED. THE CONTRACTOR SHALL BE RESPONSIBLE TO PROVIDE TEMPORARY ENCLOSURES OR PROTECTION, AS NEEDED, TO PROTECT THE EXISTING STRUCTURE AND ANY NEWLY CONSTRUCTED STRUCTURES FROM THE ILL EFFECTS OF WEATHER FOR THE DURATION OF THE ENTIRE CONSTRUCTION PROCESS.

10. THE CONTRACTOR IS FULLY RESPONSIBLE FOR ANY DAMAGE INCURRED BY HIM OR HIS SUBCONTRACTORS TO ANY EXISTING STRUCTURE OR WORK, ANY STRUCTURE OR WORK IN PROGRESS; UNUSED MATERIAL INTENDED FOR USE IN THE PROJECT; OR ANY EXISTING SITE CONDITION WITHIN THE SCOPE OF WORK INTENDED BY THESE DRAWINGS AND SPECIFICATIONS. THIS RESPONSIBILITY WILL INCLUDE ANY MATERIALS AND LABOR REQUIRED TO CORRECT SUCH DAMAGE TO THE OWNER'S SATISFACTION AT NO COST TO THE OWNER UNLESS AGREED TO BY THE OWNER IN WRITING.

11. THE CONTRACTOR SHALL WARRANTY ACCORDING TO STATE CONSTRUCTION LAW ALL WORK DONE BY HIM, HIS EMPLOYEES AND HIS SUBCONTRACTORS AGAINST ALL VISIBLE DEFECTS OR ERRORS THAT BECOME APPARENT WITHIN THE FIRST YEAR AFTER THE COMPLETION OF THE PROJECT, AS ACCEPTED BY THE OWNER. THE CONTRACTOR SHALL, ADDITIONALLY, WARRANTY ALL DEFECTS AND ERRORS NOT VISIBLE, BUT CONTAINED WITHIN CONSTRUCTED WORK, FOR A PERIOD OF TEN YEARS FROM THE COMPLETION OF THE PROJECT, ALSO ACCORDING TO STATE CONSTRUCTION LAW. ANY AND ALL DEFECTS AND ERRORS THAT DO BECOME APPARENT SHALL BE PROMPTLY REPAIRED BY THE CONTRACTOR TO THE OWNER'S SATISFACTION AT NO COST TO THE OWNER FOR MATERIALS OR LABOR. ALTERATIONS OR CHANGES TO THIS WARRANTY MUST BE MUTUALLY AGREED TO IN WRITING BY BOTH THE CONTRACTOR AND THE OWNER.

12.IT IS THE RESPONSIBILITY OF THE CONTRACTOR TO VERIFY THE APPROPRIATENESS OF THE APPLICATION OF ALL THE PRODUCT SELECTIONS SHOWN OR INTENDED IN THESE DRAWINGS AND SPECIFICATIONS. THE INTENDED MEANING OF "APPROPRIATENESS" IS THE PROPER SYSTEM, MODEL AND SPECIFIC SELECTION REQUIRED FOR THE INTENDED USE AS SHOWN ON THESE DRAWINGS AND SPECIFICATIONS. THE CONTRACTOR IS RESPONSIBLE TO VERIFY THE MOST CURRENT MODEL NAME OR NUMBER FROM THE SELECTED MANUFACTURER. THE CONTRACTOR IS RESPONSIBLE TO VERIFY THAT ANY INSTALLERS, WHICH HE SELECTS FOR THE VARIOUS PRODUCTS WILL FOLLOW ALL THAT PRODUCT MANUFACTURER'S REQUIRED AND RECOMMENDED METHODS AND PROCEDURES TO ACHIEVE THE DESIRED RESULTS CLAIMED BY SUCH MANUFACTURERS FOR THEIR PRODUCTS. IN ADDITION, THESE DRAWINGS AND SPECIFICATIONS IDENTIFY SOME REQUIRED SYSTEMS AND PRODUCTS IN GENERIC TERMS. THE CONTRACTOR IS RESPONSIBLE TO MAKE SPECIFIC SELECTIONS FOR THESE SYSTEMS AND PRODUCTS THAT SATISFY THE SAME CONDITIONS OUTLINED ABOUT THE IDENTIFIED MANUFACTURED ITEMS.

13. IT IS THE INTENT OF THESE DRAWINGS AND SPECIFICATIONS TO IDENTIFY THE SCOPE OF WORK FOR A DESIGN AND BUILD TYPE OF ELECTRICAL INSTALLATION. IT SHALL BE THE RESPONSIBILITY OF THE CONTRACTOR TO PROVIDE: THE NECESSARY LABOR FAMILIAR WITH THIS TYPE OF INSTALLATION; ALL NECESSARY MATERIALS, TOOLS, EQUIPMENT, TRANSPORTATION, TEMPORARY CONSTRUCTION; AND ANY SPECIAL OR OCCASIONAL SERVICES REQUIRED TO INSTALL A COMPLETE WORKING ELECTRICAL SYSTEM AS DIAGRAMMATICALLY DESCRIBED AND SHOWN IN THESE DRAWINGS AND SPECIFICATIONS. THE CONTRACTOR SHALL ALSO BE RESPONSIBLE TO VERIFY ANY INFORMATION THAT IS NOT INDICATED IN THESE DRAWINGS AND SPECIFICATIONS BUT IS REQUIRED FOR THE PERFORMANCE OF THE INSTALLATION.

14. IT IS THE INTENT OF THESE DRAWINGS AND SPECIFICATIONS TO IDENTIFY THE SCOPE OF WORK FOR A DESIGN AND BUILD TYPE OF MECHANICAL AND PLUMBING INSTALLATION. IT SHALL BE THE RESPONSIBILITY OF THE CONTRACTOR TO PROVIDE: THE NECESSARY LABOR FAMILIAR WITH THIS TYPE OF INSTALLATION; ALL NECESSARY MATERIALS, TOOLS, EQUIPMENT, TRANSPORTATION, TEMPORARY CONSTRUCTION; AND ANY SPECIAL OR OCCASIONAL SERVICES REQUIRED TO INSTALL COMPLETE WORKING MECHANICAL AND PLUMBING SYSTEMS, AS DIAGRAMMATICALLY DESCRIBED AND SHOWN IN THESE DRAWINGS AND SPECIFICATIONS. THE CONTRACTOR SHALL ALSO BE RESPONSIBLE TO VERIFY ANY INFORMATION THAT IS NOT INDICATED IN THESE DRAWINGS AND SPECIFICATIONS BUT IS REQUIRED FOR THE PERFORMANCE OF THE INSTALLATION.

15. IT IS THE INTENT OF THESE DRAWINGS AND SPECIFICATIONS TO IDENTIFY THE SCOPE OF WORK FOR A DESIGN AND BUILD TYPE OF FIRE SPRINKLER INSTALLATION THROUGHOUT THE ENTIRE STRUCTURE. IT WILL BE THE RESPONSIBILITY OF THE CONTRACTOR TO PROVIDE: THE NECESSARY LABOR FAMILIAR WITH THIS TYPE OF INSTALLATION; ALL NECESSARY MATERIALS, TOOLS, EQUIPMENT, TRANSPORTATION, TEMPORARY CONSTRUCTION; AND ANY SPECIAL OR OCCASIONAL SERVICES, INCLUDING THE PROCUREMENT OF ALL PERMITS REQUIRED TO INSTALL A COMPLETE WORKING SYSTEM. THE CONTRACTOR WILL ALSO BE RESPONSIBLE TO VERIFY ANY INFORMATION THAT IS NOT INDICATED IN THESE DRAWINGS AND SPECIFICATIONS BUT IS REQUIRED FOR THE PERFORMANCE OF THE INSTALLATION.

16. IF THE CONTRACTOR FINDS FAULT WITH, DISAGREES WITH, OBJECTS TO, OR WOULD LIKE TO CHANGE THE SCOPE OF THESE GENERAL NOTES OR HIS STATED RESPONSIBILITIES, AS OUTLINED IN THESE GENERAL NOTES, THEN THE CONTRACTOR MUST RESOLVE SUCH CHANGES WITH THE OWNER IN WRITING BEFORE SIGNING A CONTRACT. FAILURE TO DO SO SHALL CONSTITUTE AN UNDERSTANDING OF THESE GENERAL NOTES AND THEIR ACCEPTANCE BY THE CONTRACTOR.

17. THE CONTRACTOR SHALL IDENTIFY IN HIS PROPOSAL OR BID, WHICH PERMITS HE EXPECTS TO OBTAIN AND WHICH PERMITS AND APPLICATION FEES HE EXPECTS THE OWNER TO PROVIDE.

**GENERAL NOTES (CONT'D):**

18. THE CONTRACTOR IS RESPONSIBLE TO IDENTIFY ANY CONFLICTS BETWEEN HIS CONTRACT WITH THE OWNER AND THESE DRAWINGS. THE ARCHITECT, THE CONTRACTOR AND THE OWNER SHALL REVIEW THESE CONFLICTS IN ORDER TO AMEND ONE OF THESE DOCUMENTS BEFORE THE START OF THE CONSTRUCTION. IF A CONFLICT IS DISCOVERED WITHOUT THIS PRIOR RESOLUTION, THEN THESE DRAWINGS SHALL TAKE PRECEDENCE OVER ANY OTHER DOCUMENTS IN RESOLVING A CONFLICT.

19. THE CONTRACTOR SHALL ASSUME THAT SITE MEETINGS WITH THE OWNER, THE ARCHITECT AND THE CONTRACTOR PRESENT SHALL BE HELD ONCE EVERY WEEK, UNLESS THEY ARE MUTUALLY CHANGED OR CANCELED. THE CONTRACTOR SHALL KEEP WRITTEN NOTES OF ALL RELEVANT INFORMATION DISCUSSED AT THESE MEETINGS AND PROVIDE COPIES TO THE OWNER AND THE ARCHITECT, UNLESS DIFFERING ARRANGEMENTS ARE RESOLVED WITH THE ARCHITECT AND THE OWNER. THE ARCHITECT SHALL PROVIDE ANY REQUESTED SKETCHES OR ANY REQUESTED INFORMATION THAT IS REQUIRED AND REQUESTED DURING THESE MEETINGS. THE OWNER AND THE CONTRACTOR SHALL ALSO PROVIDE ANY REQUESTED INFORMATION THAT IS REQUIRED DURING THESE MEETINGS.

20. THE ARCHITECT OR THE OWNER CAN WRITE AND ISSUE FIELD ORDERS FOR CHANGES TO THE DRAWINGS AND SPECIFICATIONS, AS REQUESTED BY OWNER OR THE CONTRACTOR. IF ADDITIONAL (OR DELETION OF) COST TO THE PROJECT IS REQUIRED, THEN THESE FIELD ORDERS SHALL BECOME THE BASIS OF A CHANGE ORDER.

21. THE CONTRACTOR SHALL WRITE AND ISSUE ALL CHANGE ORDERS, WHICH SHALL INCLUDE A COST BREAKDOWN FOR ALL THE WORK DESCRIBED IN SUCH A CHANGE ORDER. ANY CHANGE ORDER WILL NOT BE BINDING TO THE OWNER UNTIL BOTH THE CONTRACTOR AND THE OWNER HAVE SIGNED IT.

22. UPON SUBSTANTIAL COMPLETION THE CONTRACTOR SHALL NOTIFY THE ARCHITECT, WHO SHALL COORDINATE A WALK-THROUGH OF THE PROJECT WITH THE OWNER AND THE CONTRACTOR AND THEN PROVIDE A PUNCH LIST OF ITEMS TO COMPLETE. ARRANGEMENTS FOR FINAL PAYMENT WILL BE MADE AT THAT TIME

.

**CONSTRUCTION NOTES:**

1. THE CONTRACTOR WILL BE RESPONSIBLE TO MAINTAIN THE SECURITY OF THE JOB SITE DURING THE CONSTRUCTION PROCESS UNTIL FINAL ACCEPTANCE BY THE OWNER OR UNTIL AN ALTERNATE DATE, AS MUTUALLY AGREED BETWEEN THE OWNER AND THE CONTRACTOR.

2. THE CONTRACTOR WILL VERIFY THE ROUGH-IN DIMENSIONS AND REQUIREMENTS FROM THE APPROPRIATE MANUFACTURER OR FABRICATOR FOR DOORS, WINDOWS, EQUIPMENT, CABINETRY, PLUMBING FIXTURES, ELECTRICAL FIXTURES, APPLIANCES AND ANY OTHER DEVICES BEFORE PROCEEDING TO LAY OUT AREAS WHERE SUCH ITEMS ARE LOCATED.

3. FIREBLOCKING SHALL BE PROVIDED IN ALL LOCATIONS IDENTIFIED IN SECTION 717.2 OF THE CALIFORNIA BUILDING CODE (CBC) AND IN ANY ADDITIONAL LOCATIONS IDENTIFIED BY THE LOCAL AUTHORITIES OR LOCAL ORDINANCES.

4. THE CONTRACTOR WILL VERIFY ALL ROOF AND FRAMING SPACES REQUIRED TO BE VENTILATED WITH THE LOCAL FIELD INSPECTOR OR BY THE CBC AND PROVIDE THE APPROPRIATE NET FEE VENTILATION AREA, BUT IN NO CASE SHALL IT BE LESS THAN 1/50TH OF THE AREA OF THE SPACE TO BE VENTILATED. WHEN THE MEANS OF THE VENTILATION IS VISIBLE FROM A COMMONLY USED SPACE, PASSAGEWAY, YARD OR PUBLIC RIGHT OF WAY, THE CONTRACTOR SHALL REVIEW THIS SITUATION WITH THE ARCHITECT FOR DESIGN CONFORMANCE BEFORE INSTALLING SUCH DEVICES, EQUIPMENT OR MATERIALS.

5. THE CONTRACTOR WILL VERIFY AND PROVIDE THE REQUIRED BLOCKING AND BACKING FOR ALL CABINETRY, WALL-MOUNTED ACCESSORIES, BUILT-IN EQUIPMENT, LIGHT FIXTURES OR OTHER DEVICES REQUIRING BLOCKING OR BACKING.

6. THE CONTRACTOR WILL VERIFY AND PROVIDE ALL CODE REQUIRED FIREPROOFING AT ALL PENETRATIONS INTO AND THROUGH A FIRE RATED FLOOR, WALL, CEILING OR ROOF ASSEMBLY.

7. ALL CHANGES OR OFFSETS IN FLOOR FINISH MATERIAL WILL OCCUR UNDER A THRESHOLD, WHEN PROVIDED, OR AT THE CENTERLINE OF A DOOR TRANSITION UNLESS OTHERWISE INDICATED ON THE DRAWINGS. OTHER LOCATIONS OF THESE CONDITIONS SHALL BE VERIFIED WITH THE ARCHITECT IN THE FIELD FOR DESIGN CONFORMANCE BEFORE INSTALLING ANY MATERIAL.

8. THE SEALANT, CAULKING AND FLASHING LOCATIONS SHOWN ON THESE DRAWINGS ARE NOT INTENDED TO COVER ALL CONDITIONS REQUIRING THESE PRODUCTS. IT IS THE RESPONSIBILITY OF THE CONTRACTOR TO IDENTIFY ALL CONDITIONS REQUIRING THESE PRODUCTS, SIMILAR PRODUCTS AND REVIEW THESE CONDITIONS NOT IDENTIFIED IN THE DRAWINGS WITH THE ARCHITECT FOR DESIGN CONFORMANCE.

9. COMPLETE ALL WORK REQUIRED TO MEET THE STATE OF CALIFORNIA ENERGY CONSERVATION REQUIREMENTS IDENTIFIED IN THE TITLE 24 REPORT SUBMITTED FOR THIS PROJECT INCLUDING BUT NOT LIMITED TO ALL MANDATORY AND SPECIAL FEATURES, AS WELL AS ANY LOCAL ORDINANCES AND ANY NEW REQUIREMENTS IDENTIFIED BY THE LOCAL BUILDING FIELD INSPECTOR. IF A TITLE 24 REPORT WAS NOT REQUIRED FOR THIS PROJECT, THEN THE CONTRACTOR SHALL PROVIDE ALL MEASURES REQUIRED BY THE STATE APPROVED MANDATORY FEATURES REGULATIONS IDENTIFIED IN TITLE 24.

10. THE CONTRACTOR SHALL IDENTIFY IN HIS PROPOSAL WHICH UTILITY TYPE (WATER, ELECTRICITY, TELEPHONE, INTERNET, ETC.) CONNECTIONS, USE AND RELATED COSTS WILL BE INCLUDED IN HIS OVERHEAD AND WHICH COSTS HE EXPECTS THE OWNER TO PROVIDE. ANY UTILITY TYPE COST WHICH IS NOT IDENTIFIED, AS AN OWNER PROVIDED ITEM, WILL BE ASSUMED TO BE INCLUDED IN THE CONTRACTOR'S OVERHEAD COST.

11. THE CONTRACTOR SHALL IDENTIFY AND PROVIDE THE REQUIRED SIDEWALK AND PUBLIC PASSAGE ENCLOSURE PROTECTION AT ANY AFFECTED RIGHT-OF-WAY AREAS OR PUBLIC ACCESS LOCATIONS. THE CONTRACTOR WILL REVIEW ALL INTENDED SIGNAGE WITH THE ARCHITECT FOR DESIGN CONFORMANCE.

12. THE CONTRACTOR SHALL BE RESPONSIBLE FOR ALL MEANS AND METHODS OF CONSTRUCTION AND ANY DIRECTION FROM THE OWNER OR THE ARCHITECT SHALL NOT BE CONSTRUED TO OVER RIDE THIS RESPONSIBILITY UNLESS MUTUALLY AGREED TO IN A WRITTEN DOCUMENT IDENTIFYING A SPECIFIC AREA OF WORK FOR WHICH THE CONTRACTOR WILL NOT BE RESPONSIBLE.

**DEMOLITION NOTES:**

1. THE DEMOLITION WORK SHOWN ON THESE DRAWINGS MAY NOT BE THE COMPLETE DEMOLITION REQUIRED TO ACCOMMODATE THE NEW WORK, WHICH IS SHOWN ELSEWHERE. THE INTENT OF THESE DRAWINGS IS TO GENERALLY SHOW THE DEMOLITION SCOPE OF WORK EXPECTED OF THE CONTRACTOR. THE CONTRACTOR WILL BE RESPONSIBLE TO COORDINATE ANY ADDITIONAL DEMOLITION WORK AND VERIFY THE EXTENT OF DEMOLITION REQUIRED IN ORDER TO ACCOMMODATE ANY NEW WORK.

2. ALL THE DIMENSIONS SHOWN, OR NOT SHOWN BUT REQUIRED, MUST BE VERIFIED IN THE FIELD BY THE CONTRACTOR. THE INFORMATION SHOWN ON THESE DRAWINGS WAS DERIVED BY THE ARCHITECT WITHOUT ANY SURVEYING OR ENGINEERING EQUIPMENT AND IS INTENDED TO BE HELPFUL, BUT NOT NECESSARILY ACCURATE.

3. ALL BIDS OR PROPOSALS MUST CLEARLY IDENTIFY WHAT WORK WILL BE PERFORMED AND WHAT WORK WILL NOT BE PERFORMED. THE CONTRACTOR WILL ALSO IDENTIFY ANY ALLOWANCES FOR WORK TOO UNCERTAIN TO BID FROM THE INFORMATION SHOWN ON THESE DRAWINGS.

4. THE CONTRACTOR WILL COORDINATE THE CAPPING AND PATCHING OF ALL EXISTING PLUMBING FIXTURES, SPRINKLER SYSTEMS AND RELATED EQUIPMENT SHOWN TO BE REMOVED WITH THE EXISTING ROUGH-IN SYSTEM TO REMAIN. THE CONTRACTOR WILL VERIFY THE WORK REQUIRED FOR INSTALLING AND CONNECTING NEW PLUMBING FIXTURES AND RELATED EQUIPMENT, AS SHOWN ON THE NEW WORK PLANS, TO THE REMAINING EXISTING SYSTEM. THE CONTRACTOR WILL REVIEW WITH THE ARCHITECT IN THE FIELD ANY CONDITIONS THAT WILL CONFLICT WITH THIS INTENT.

5. THE CONTRACTOR WILL COORDINATE THE CAPPING AND PATCHING OF THE MECHANICAL SYSTEM AND RELATED DEVICES SHOWN TO BE REMOVED WITH THE EXISTING SYSTEM TO REMAIN. THE CONTRACTOR WILL VERIFY THE WORK REQUIRED FOR INSTALLING ANY NEW MECHANICAL SYSTEM AND RELATED EQUIPMENT, AS SHOWN ON THE NEW WORK PLANS, TO THE REMAINING EXISTING SYSTEM OR EQUIPMENT. THE CONTRACTOR WILL REVIEW WITH THE ARCHITECT IN THE FIELD ANY CONDITIONS THAT WILL CONFLICT WITH THIS INTENT.

6.THE CONTRACTOR WILL COORDINATE THE CAPPING AND PATCHING OF ALL EXISTING ELECTRICAL FIXTURES AND RELATED EQUIPMENT SHOWN TO BE REMOVED WITH THE EXISTING SYSTEM TO REMAIN. THE CONTRACTOR WILL VERIFY THE WORK REQUIRED FOR INSTALLING AND CONNECTING NEW ELECTRICAL FIXTURES AND RELATED EQUIPMENT, AS SHOWN ON THE NEW WORK PLANS, TO THE REMAINING EXISTING SYSTEM. THE CONTRACTOR WILL REVIEW WITH THE ARCHITECT IN THE FIELD ANY CONDITIONS THAT WILL CONFLICT WITH THIS INTENT.

7. THE CONTRACTOR WILL PROTECT EXISTING MATERIALS TO REMAIN, AS REQUIRED. DAMAGE TO EXISTING MATERIALS TO REMAIN, BECAUSE OF INADEQUATE PROTECTION SHALL BE FIXED, REPAIRED OR REPLACED, AS REQUIRED BY THE ARCHITECT, AT THE SOLE EXPENSE OF THE CONTRACTOR INCLUDING BUT NOT NECESSARILY LIMITED TO LABOR AND MATERIALS.

8. THE CONTRACTOR IS SOLELY RESPONSIBLE FOR OBTAINING ANY ADDITIONAL PERMITS, ENGINEERING, SHORING AND ANY CONSTRUCTION DOCUMENTS BY OTHERS RELATED TO THIS WORK, WHETHER OR NOT THEY ARE REQUIRED, FROM THE LOCAL AUTHORITIES.

9. THE CONTRACTOR IS RESPONSIBLE TO PROPERLY STORE AND PROTECT ANY MATERIAL DESIGNATED ON THE DRAWINGS TO BE SALVAGED AND RE-INSTALLED AS PART OF THE NEW WORK INTENT.

**PLUMBING NOTES:**

ALL NEW PLUMBING FIXTURES SHALL HAVE THE FOLLOWING MAXIMUM FLOW RATES:
I. TOILETS SHALL HAVE A MAX. 1.28 GALLONS PER FLUSH (2022 CPC 411.2).
II. SHOWER HEADS SHALL HAVE A MAXIMUM FLOW OF 1.8 GPM (2022 CPC 408.2).
III. LAVATORY FAUCETS SHALL HAVE A MAXIMUM FLOW OF 1.2 GPM (2022 CPC 407.2.1.2).
IV. KITCHEN FAUCETS SHALL HAVE A MAXIMUM FLOW RATE OF 1.8 GPM (2022 CPC 420.2.1) AND REFERENCE CAL GREEN 4.303.1.4.1.

**GLAZING NOTES:**

ALL GLAZING REQUIRING SAFETY GLAZING SHALL BE IN ACCORDANCE WITH 2022 CRC SECTION 308.4:

A) GLAZING IN A DOOR OR WITHIN 24" OF A DOOR AND LESS THAN 60" FROM THE FLOOR.

B) GLAZING IN A WINDOW THAT IS LARGER THAN 9 SF, LESS THAN 18" AND MORE THAN 36" ABOVE THE FLOOR, WITH A WALKING SURFACE WITHIN 3' OF THE GLAZING.

C) GLAZING LESS THAN 5' ABOVE THE FLOOR AND WITHIN 5' OF A TUB; SHOWER, SPA OR SWIMMING POOL.

D) GLAZING IN GUARDS AND RAILINGS.

E) SKYLITES.

F) GLAZING LESS THAN 3' ABOVE THE LANDING AND WITHIN 5' OF THE LANDING OR ADJACENT TO STAIRS.

REVISIONS

**OWNER:**
**Shameka Shaheed**
4720 Chamberlin Cir. Elk Grove, CA 95757

**ARCHITECT:**
**AS Architecture Inc.**
2110 K St.
Sacramento, CA 95816
T: 510-883-3911
E: charles@asarchitectureinc.com

**NOT FOR CONSTRUCTION**

**4720 Chamberlin Cir.**

4720 Chamberlin Cir. Elk Grove, CA 95757

TITLE:

**Notes**

| | |
|---|---|
| SET: | **Building Permit** |
| DATE: | **09/02/2025** |
| SCALE: | |
| DRAWN | **AS Architecture Inc.** |

SHEET NUMBER

A0.2

# UTILITY LEGEND:

- —W—W— WATER LINE
- —SS—SS— SANITARY SEWER LINE
- —E—E— ELECTRIC LINE
- WM WATER METER
- EP (E) MAIN ELECTRICAL PANEL
- SP (N) ELECTRICAL SUB-PANEL
- SANITARY SEWER CLEANOUT

# UTILITY NOTES:

**1.** INSTALL (N) SANITARY SEWER LATERALS. USE 4" PVC SLOPED AT 2% MINIMUM. CONNECT TO (E) SEWER MAIN AS SHOWN. PROVIDE CLEANOUT TO GRADE AT BUILDING AND BEHIND PROPERTY LINE AND AT MAJOR CHANGES IN DIRECTION AS SHOWN. CONNECT PER DISTRICT STANDARDS. CONTRACTOR TO VERIFY EXACT LOCATIONS, SIZES, AND CONNECTIONS.

**2.** CONNECT (N) WATER SERVICE PER WATER DISTRICT STANDARDS. INSTALL (N) SERVICE LINE PER DISTRICT STANDARDS. CONTRACTOR TO VERIFY EXACT LOCATIONS.

**3.** INSTALL (N) JOINT TRENCH FOR SERVICES INCLUDING CATV & ELECTRIC FROM NEAREST POINT OF CONNECTION. CONTRACTOR TO VERIFY EXACT LOCATIONS.

**4.** EXISTING MAIN PANEL. CONTRACTOR TO VERIFY EXACT LOCATION AND SIZE.

**5.** NEW 200 AMP SUB-PANEL. CONTRACTOR TO VERIFY EXACT LOCATION.

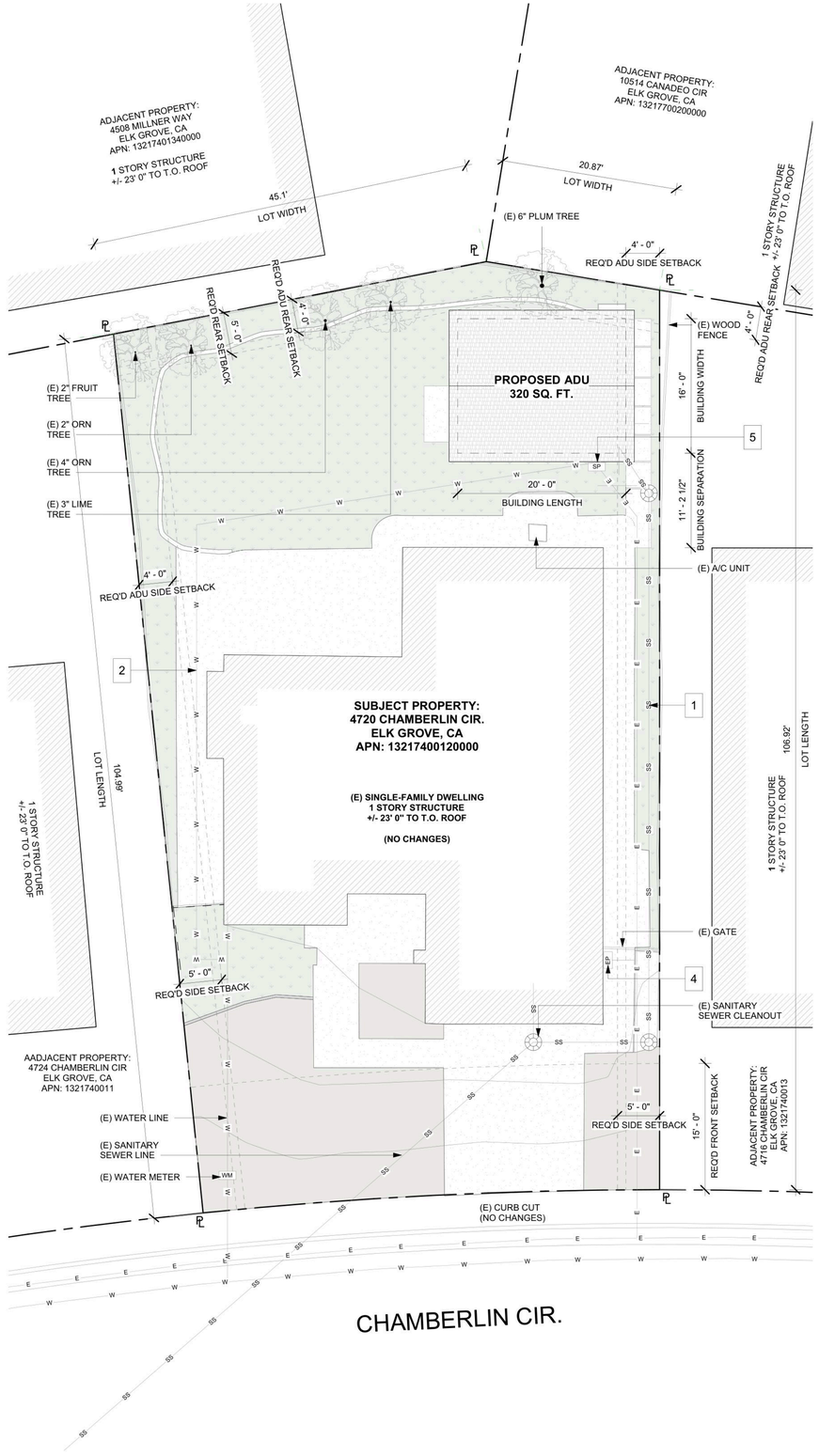


2 Proposed Site Plan
1/8" = 1'-0"

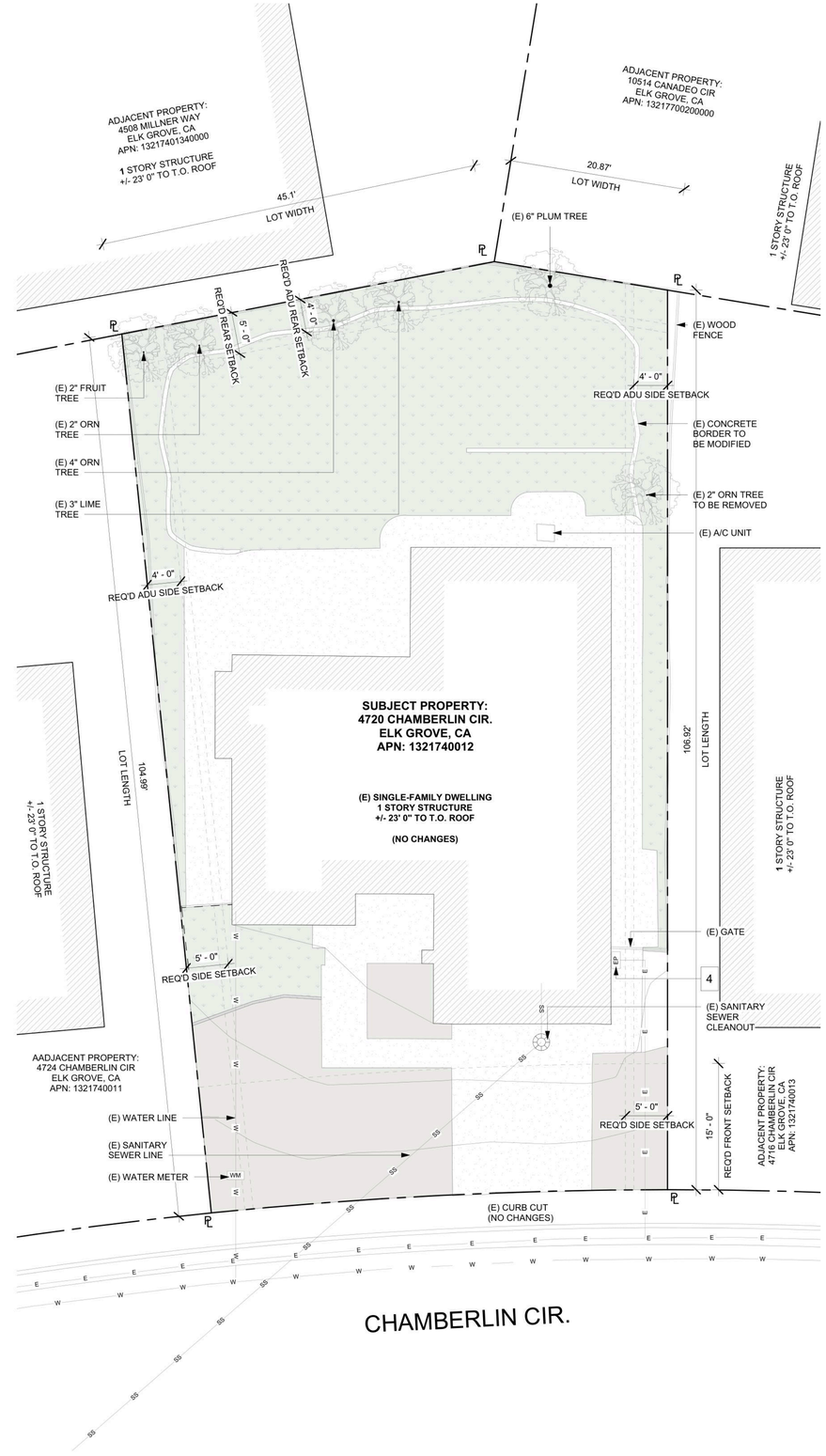


1 Existing Site Plan
1/8" = 1'-0"

REVISIONS


**OWNER:**
**Shameka Shaheed**
4720 Chamberlin Cir. Elk Grove, CA 95757

**ARCHITECT:**
**AS Architecture Inc.**
2110 K St.
Sacramento, CA 95816
T: 510-883-3911
E: charles@asarchitectureinc.com


**NOT FOR CONSTRUCTION**

# 4720 Chamberlin Cir.

4720 Chamberlin Cir. Elk Grove, CA 95757

TITLE:
**Site Plans**

| | |
|---|---|
| SET: | **Building Permit** |
| DATE: | **09/02/2025** |
| SCALE: | **1/8" = 1'-0"** |
| DRAWN | **AS Architecture Inc.** |

SHEET NUMBER
A0.3

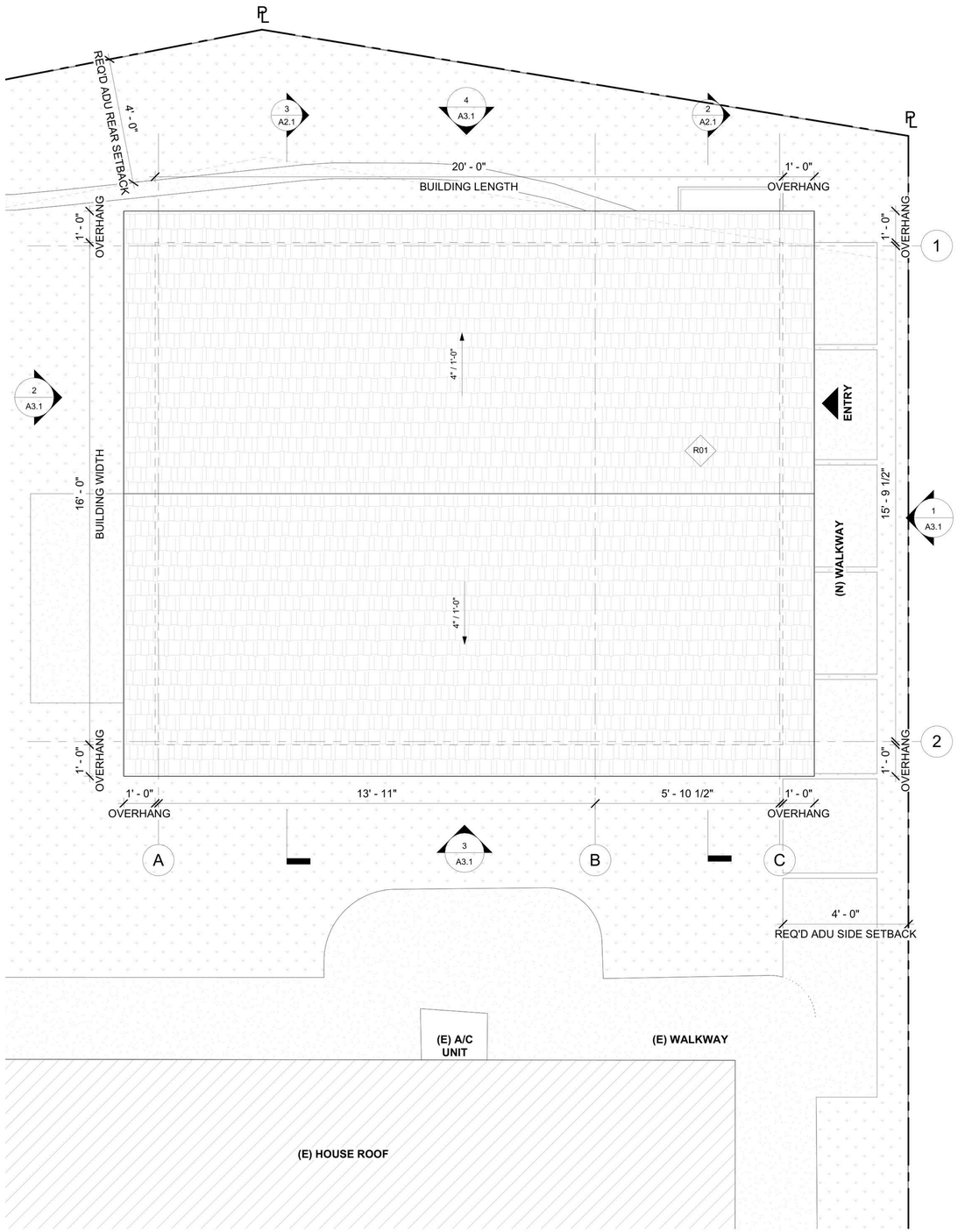


2 Roof Plan
1/2" = 1'-0"

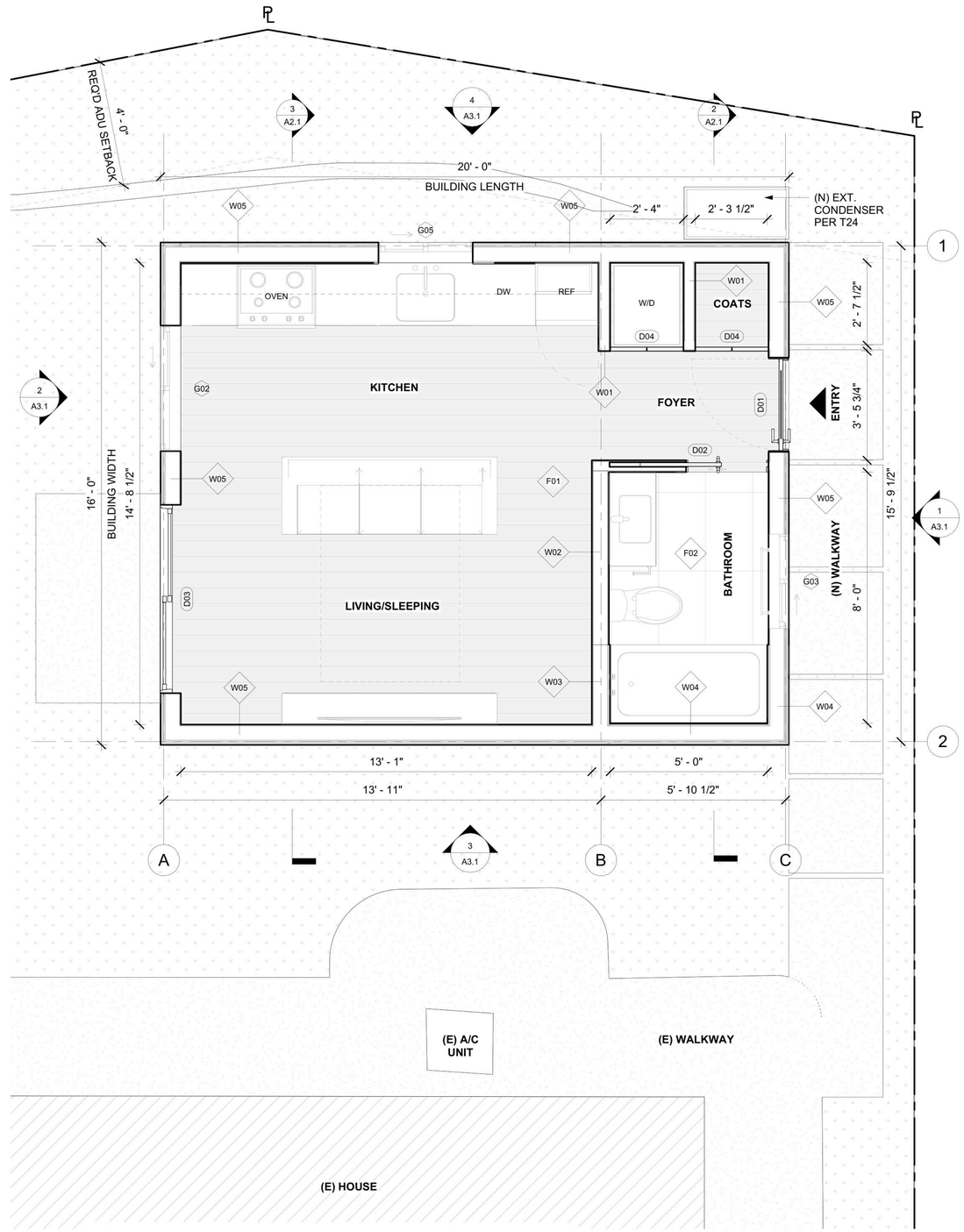


1 Level 1
1/2" = 1'-0"

REVISIONS

**OWNER:**
**Shameka Shaheed**
4720 Chamberlin Cir. Elk Grove, CA 95757

**ARCHITECT:**
**AS Architecture Inc.**
2110 K St.
Sacramento, CA 95816
T: 510-883-3911
E: charles@asarchitectureinc.com

**NOT FOR CONSTRUCTION**

# 4720 Chamberlin Cir.

4720 Chamberlin Cir. Elk Grove, CA 95757

TITLE:
**Floor Plan & Roof Plan**

| | |
|---|---|
| SET: | **Building Permit** |
| DATE: | **09/02/2025** |
| SCALE: | **1/2" = 1'-0"** |
| DRAWN | **AS Architecture Inc.** |

SHEET NUMBER
A1.1

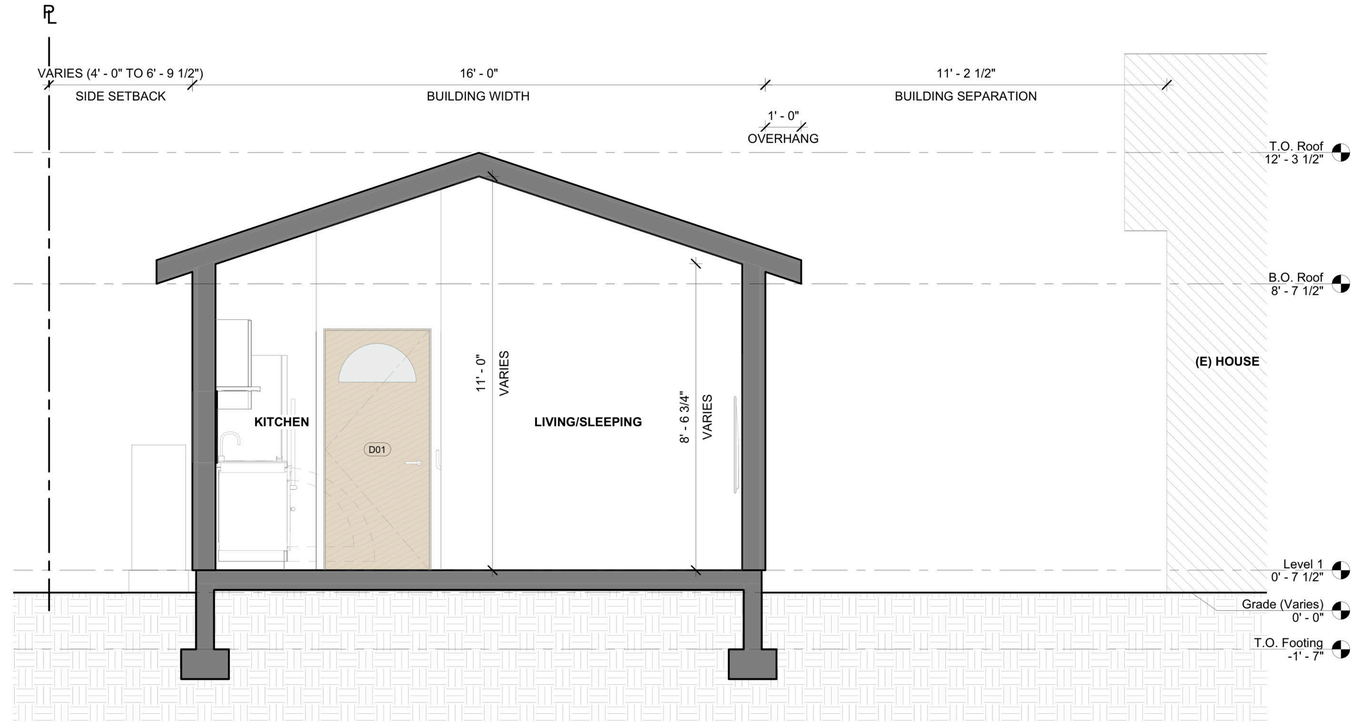


3 Section 3
1/2" = 1'-0"

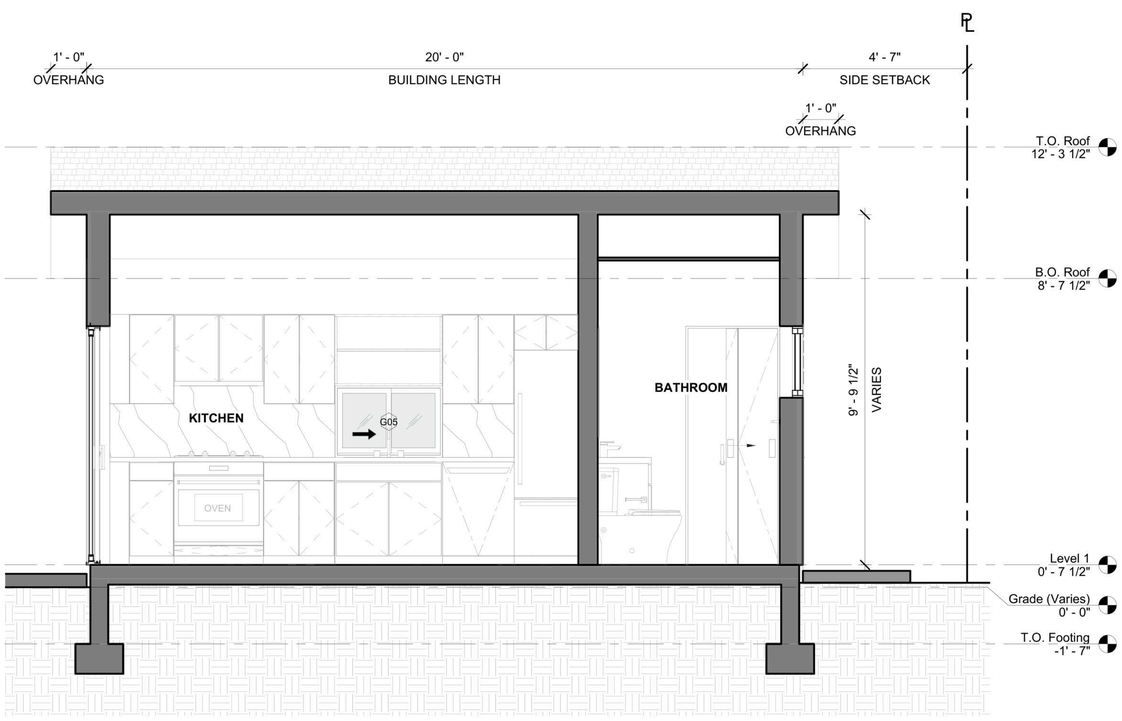


1 Section 2
1/2" = 1'-0"

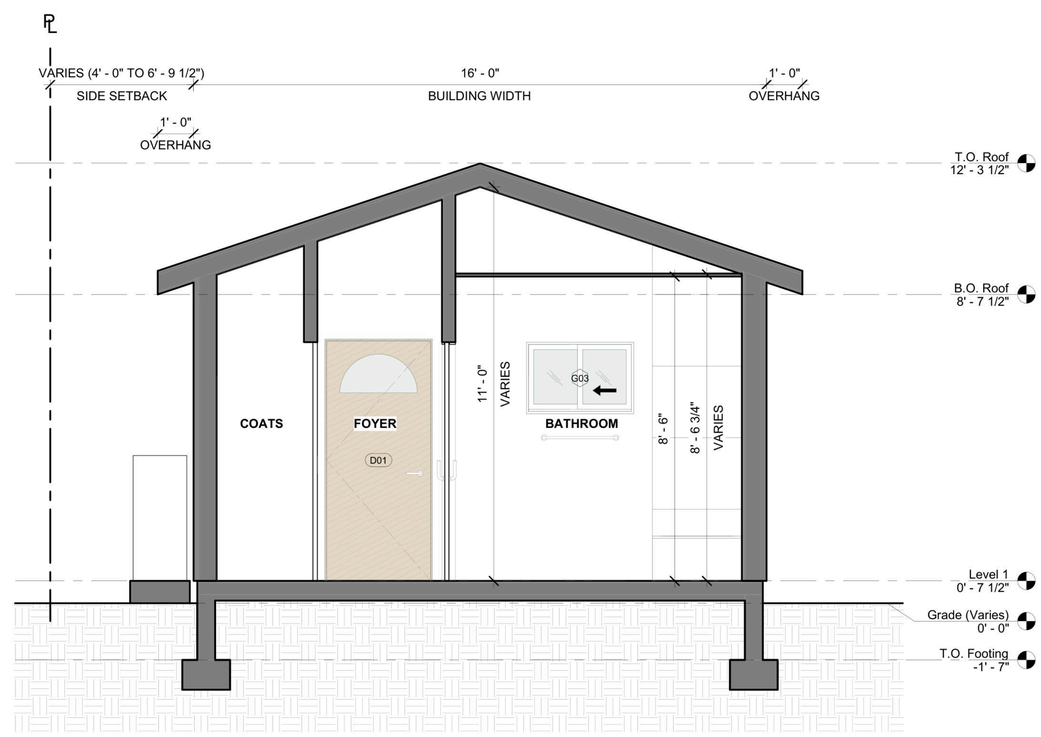


2 Section 1
1/2" = 1'-0"

REVISIONS

**OWNER:**
**Shameka Shaheed**
4720 Chamberlin Cir. Elk Grove, CA 95757

**ARCHITECT:**
**AS Architecture Inc.**
2110 K St.
Sacramento, CA 95816
T: 510-883-3911
E: charles@asarchitectureinc.com

**NOT FOR CONSTRUCTION**

# 4720 Chamberlin Cir.

4720 Chamberlin Cir. Elk Grove, CA 95757

TITLE:
**Sections**

| | |
|---|---|
| SET: | **Building Permit** |
| DATE: | **09/02/2025** |
| SCALE: | **1/2" = 1'-0"** |
| DRAWN | **AS Architecture Inc.** |

SHEET NUMBER
A2.1

# EXTERIOR MATERIAL NOTES

**1.** ASPHALT SHINGLES ROOF ASSEMBLY.

**2.** FIBER CEMENT LAP SIDING TO MATCH THE EXISTING HOUSE.

**3.** FIBER CEMENT LAP SIDING PAINTED AS ACCENT COLOR.

**4.** VINYL OR ALUMINUM WINDOW/SLIDING GLASS DOOR.

5. 4" TALL ALUMINUM MODERN BUILDING ADDRESS NUMBERS. 'CENTURY GOTHIC FONT' OR SIMILAR. MINIMUM STROKE OF 1/2" SHALL BE ILLUMINATED AND PLACED IN LEGIBLE AND VISIBLE FROM THE STREET FACING FACADE.

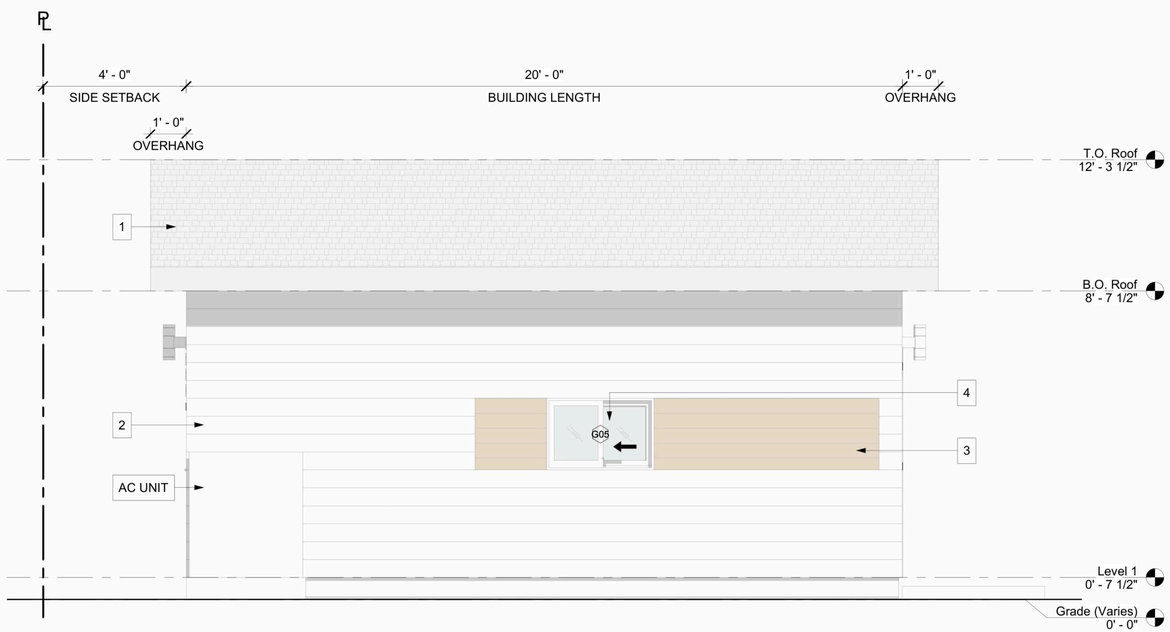


4 West Elevation
1/2" = 1'-0"

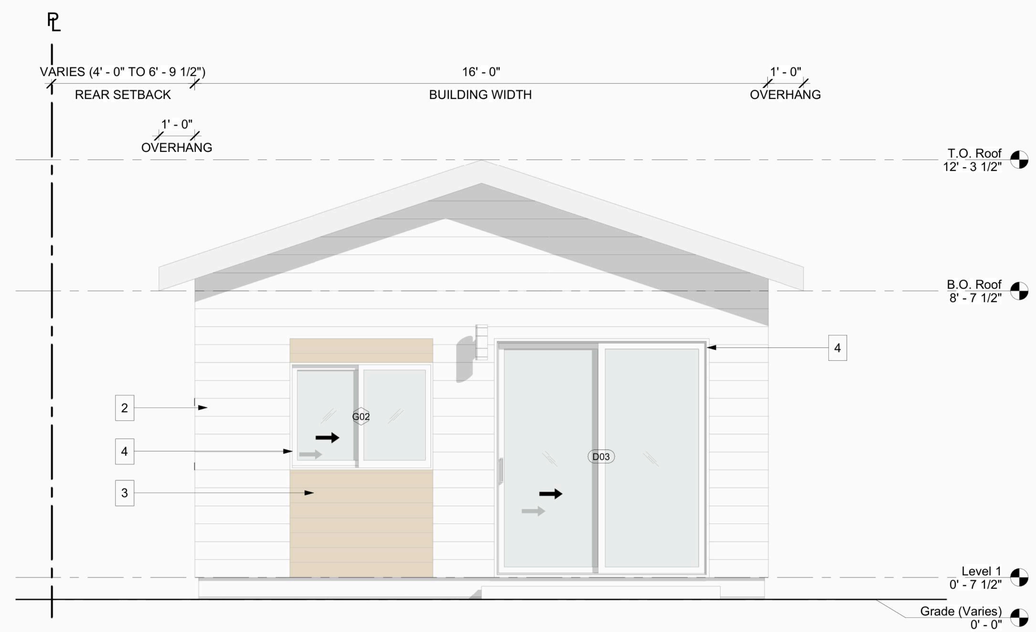


2 South Elevation
1/2" = 1'-0"

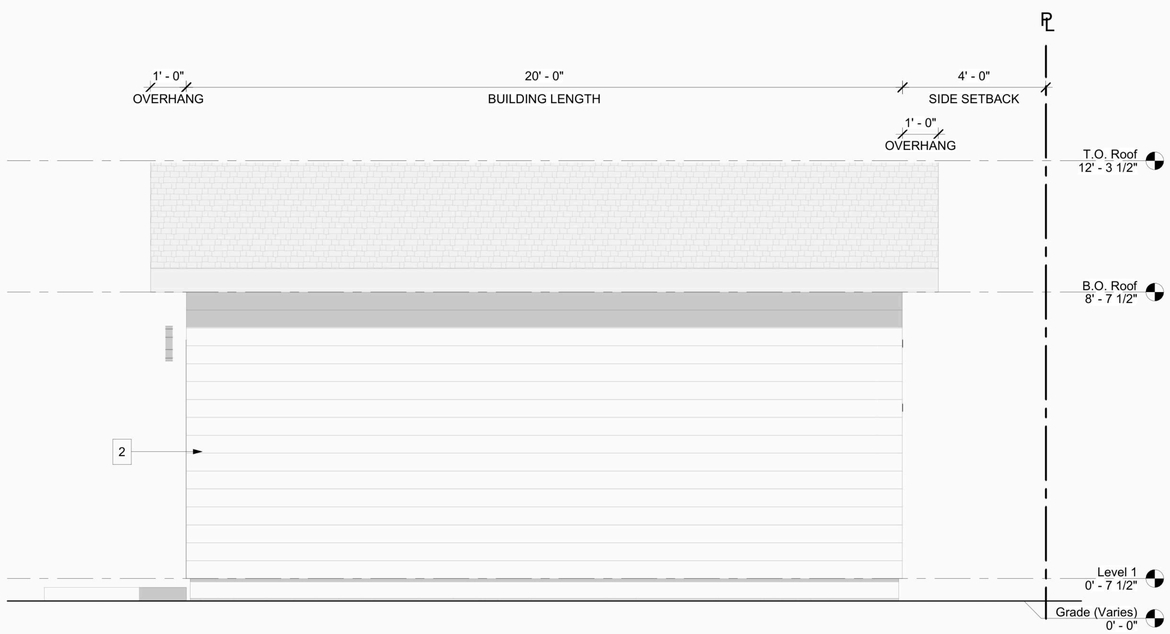


3 East Elevation
1/2" = 1'-0"

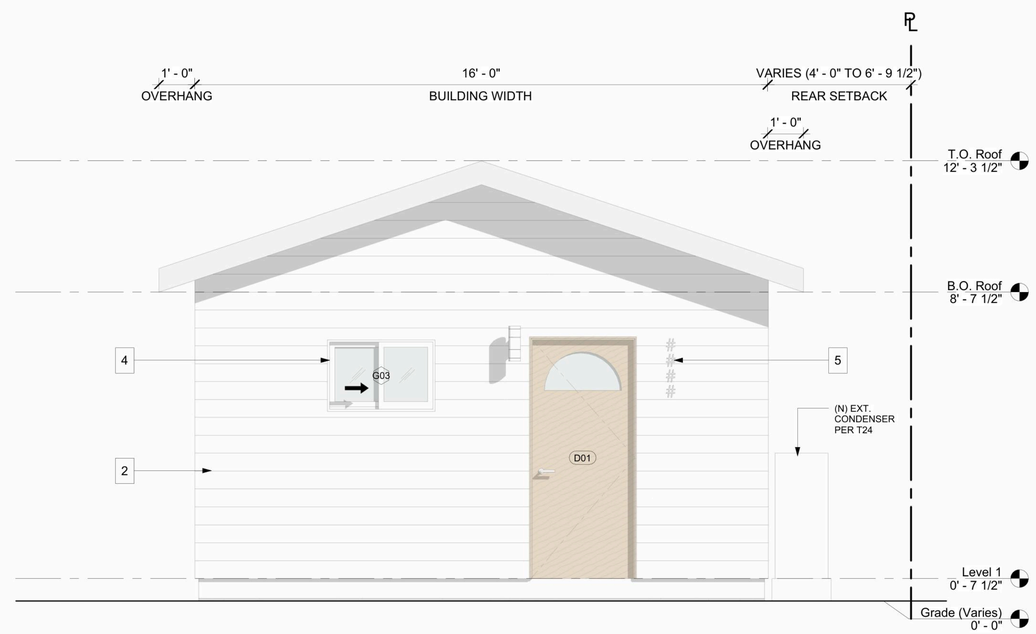


1 North Elevation
1/2" = 1'-0"

REVISIONS


**OWNER:**
**Shameka Shaheed**
4720 Chamberlin Cir. Elk Grove, CA 95757

**ARCHITECT:**
**AS Architecture Inc.**
2110 K St.
Sacramento, CA 95816
T: 510-883-3911
E: charles@asarchitectureinc.com


**NOT FOR CONSTRUCTION**

**4720 Chamberlin Cir.**
4720 Chamberlin Cir. Elk Grove, CA 95757

TITLE:
**Elevations**

| | |
|---|---|
| SET: | **Building Permit** |
| DATE: | **09/02/2025** |
| SCALE: | **As indicated** |
| DRAWN | **AS Architecture Inc.** |

SHEET NUMBER
A3.1

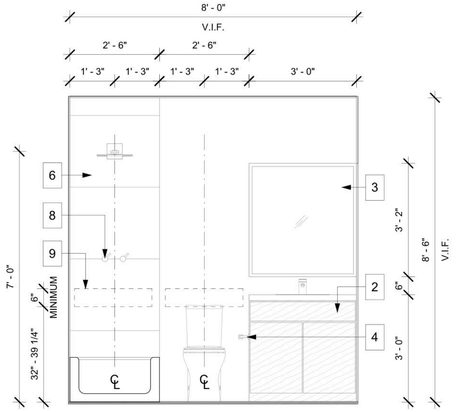


9 Elevation 1 - a
1/2" = 1'-0"

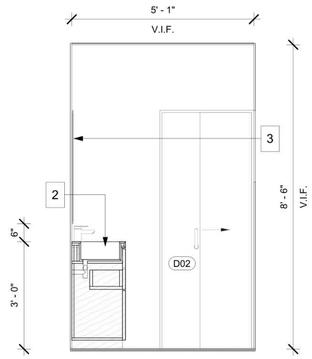


8 Elevation 1 - b
1/2" = 1'-0"

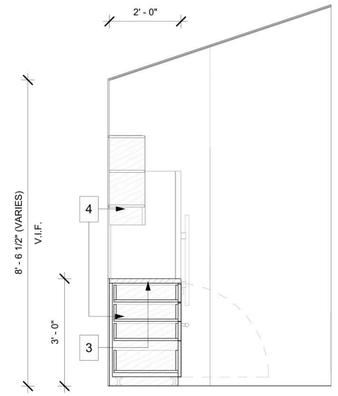


4 Elevation 2 - b
1/2" = 1'-0"

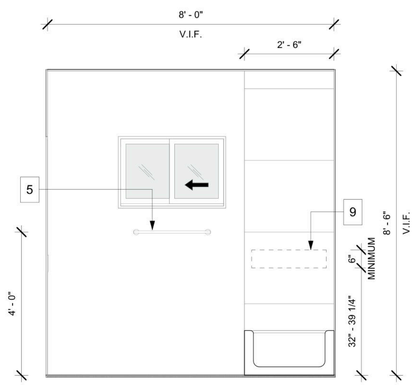


7 Elevation 1 - c
1/2" = 1'-0"

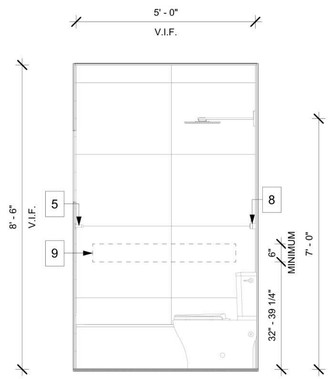


6 Elevation 1 - d
1/2" = 1'-0"

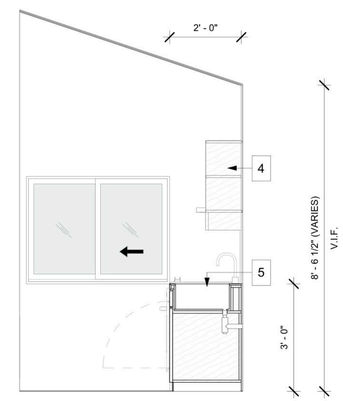


3 Elevation 2 - d
1/2" = 1'-0"

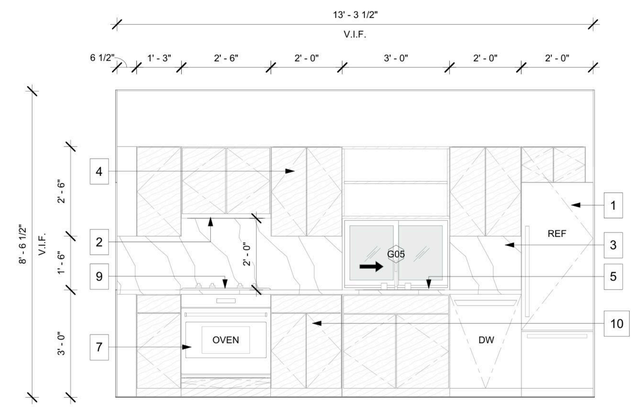


2 Elevation 2 - a
1/2" = 1'-0"

## BATHROOM NOTES

**1.** 1/2" OBSCURED TEMPERED GLASS W/ MATCHING GLASS PIVOT DOOR. SEE DOOR TYPES FOR SIZE.

**2.** 1 DRAWER 2 DOOR FLOOR MOUNTED VANITY BASIN

**3.** MIRROR EXPOSIED TO GYP BD.

**4.** TP HOLDER

**5.** TOWEL BAR

**6.** TILE

**7.** WHITE PAINT

**8.** SHOWER CONTROLS

**9.** REINFORCEMENT FOR FUTURE GRAB BARS PER R327.1.1. REINFORCEMENT SHALL NOT BE LESS THAN 2X8 BLOCKING LOCATED BETWEEN 32" AND 39 1/4" A.F.F. FLUSH WITH WALL FRAMING.

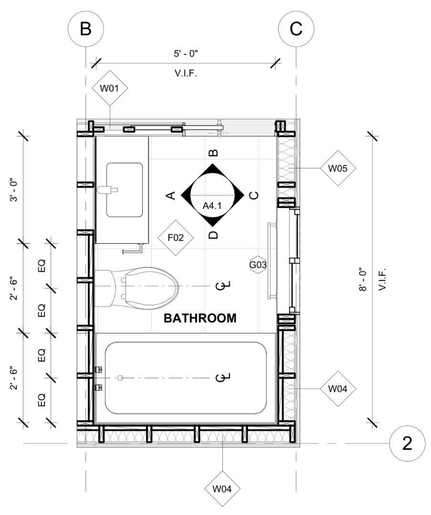


5 ADU - Bathroom Plan
1/2" = 1'-0"

## KITCHEN NOTES

**1.** STAINLESS STEEL REFRIGERATOR.

**2.** CONCEALED STAINLESS STEEL VENT HOOD

**3.** WHITE STONE COUNTER TOP AND MATCHING BACKSPLASH. WATERFALL STONE ON BOTH SIDES OF ISLAND

**4.** BASE, UPPER AND PANTRY CABINETS; LIGHT ASH WOOD FRONTS OR SIMILAR.

**5.** STAINLESS STEEL SINK; 36" WIDE CABINET

**6.** 120V OVEN BUILT-IN MICROWAVE. STAINLESS STEEL FRONT

**7.** 240V BUILT-IN OVEN. STAINLESS STEEL FRONT

**8.** 120V OVEN BUILT-IN WARMER DRAWER; STAINLESS STEEL FRONT

**9.** 120V GAS 6-BURNER INDUCTION COOKTOP.

**10.** UNDER COUNTER WINE REFRIGERATOR; STAINLESS STEEL FRONT

**11.** 30" WIDE DISHWASHER. STAINLESS STEEL FRONT

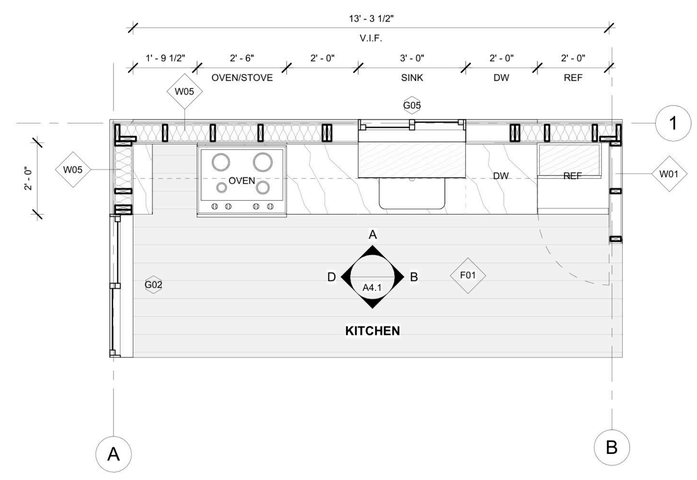


1 ADU - Kitchen Plan
1/2" = 1'-0"

REVISIONS

**OWNER:**
**Shameka Shaheed**
4720 Chamberlin Cir. Elk Grove, CA 95757

**ARCHITECT:**
**AS Architecture Inc.**
2110 K St.
Sacramento, CA 95816
T: 510-883-3911
E: charles@asarchitectureinc.com

**NOT FOR CONSTRUCTION**

# 4720 Chamberlin Cir.

4720 Chamberlin Cir. Elk Grove, CA 95757

TITLE:
**Interior Elevations**

| | |
|---|---|
| SET: | **Building Permit** |
| DATE: | **09/02/2025** |
| SCALE: | **1/2" = 1'-0"** |
| DRAWN | **AS Architecture Inc.** |

SHEET NUMBER
A4.1

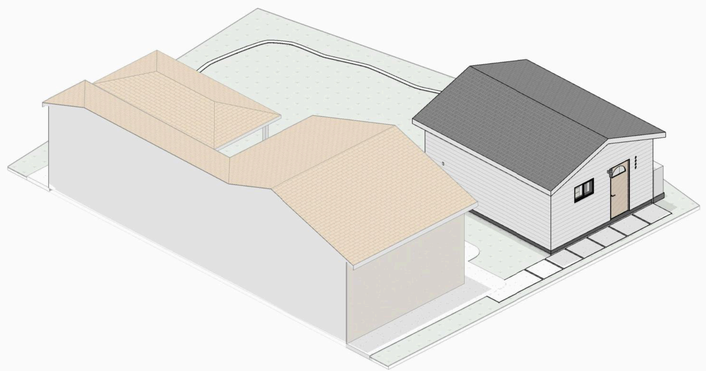

4 View 4

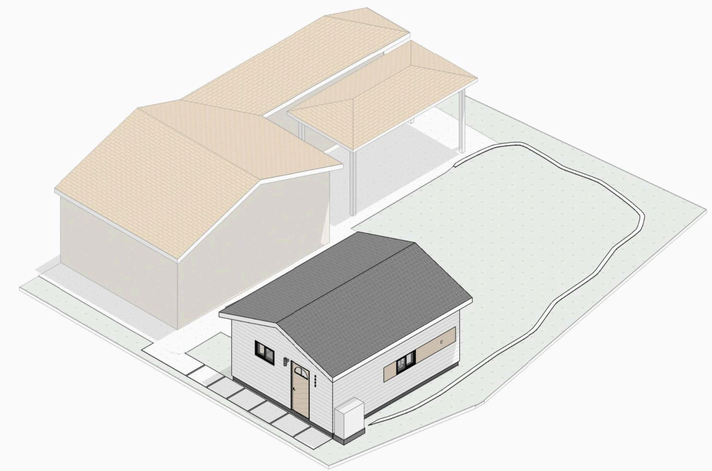

3 View 3

2 View 2

1 View 1

REVISIONS

**OWNER:**
**Shameka Shaheed**
4720 Chamberlin Cir. Elk Grove, CA 95757

**ARCHITECT:**
**AS Architecture Inc.**
2110 K St.
Sacramento, CA 95816
T: 510-883-3911
E: charles@asarchitectureinc.com

**NOT FOR CONSTRUCTION**

# 4720 Chamberlin Cir.

4720 Chamberlin Cir. Elk Grove, CA 95757

TITLE:
**3D Views**

| | |
|---|---|
| SET: | **Building Permit** |
| DATE: | **09/02/2025** |
| SCALE: | |
| DRAWN | **AS Architecture Inc.** |

SHEET NUMBER
A4.2

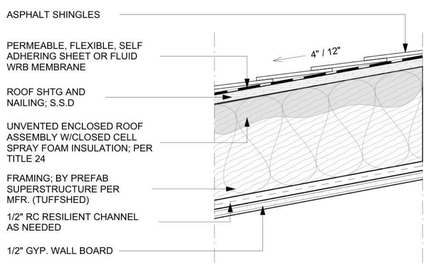


R01
SECTION - EXT ASPHALT SHINGLES

FIRE RATING / TEST # / STC / IIC / R-VALUE
3 HR / / N/A / N/A/ N/A

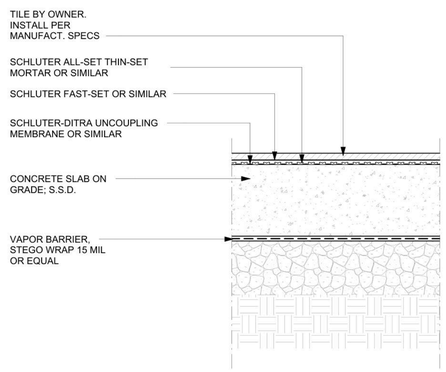


F02
SECTION-RC SOG, TILE

@BATHROOM

FIRE RATING / TEST # / STC / IIC / R-VALUE
3 HR / N/A / N/A/ N/A

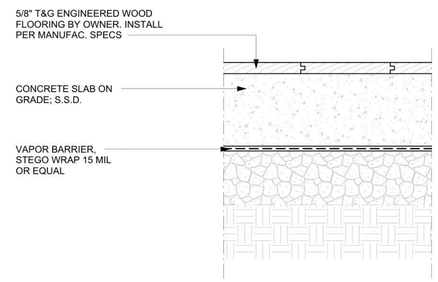


F01
SECTION - RC SOG, WOOD PLANK

@LIVING, DINING, KITCHEN, FOYER

FIRE RATING / TEST # / STC / IIC / R-VALUE
3 HR / N/A / N/A/ N/A

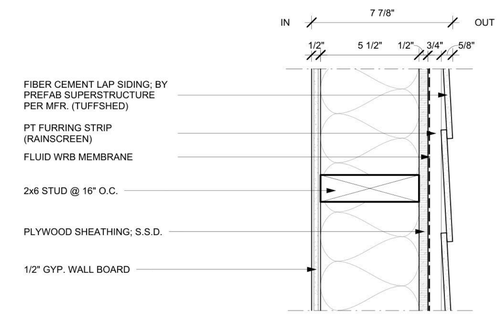


W05
SECTION-EXT SIDING & GYP, NR, 2X6

@LIVING, DINING, KITCHEN, FOYER, BATHROOM

FIRE RATING / TEST # / STC / R-VALUE
NR / NA / N/A / R-21

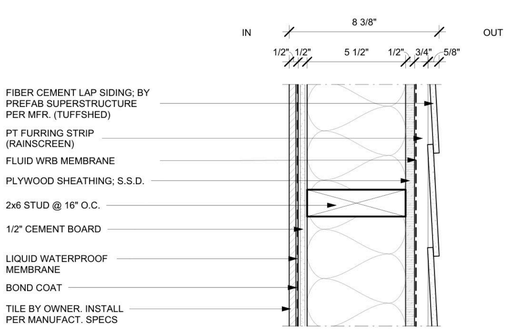


W04
SECTION-EXT SIDING & TILE, NR, 2X6

@BATHROOM

FIRE RATING / TEST # / STC / R-VALUE
NA / NA / NA / NA

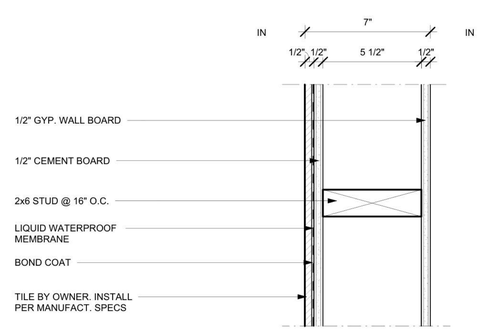


W03
SECTION-INT GYP & TILE, NR, 2X6

@BATHROOM

FIRE RATING / TEST # / STC / R-VALUE
NR / NA / N/A / NA

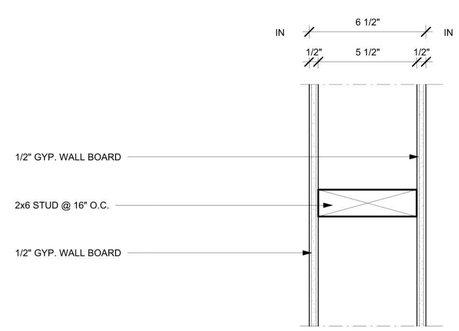


W02
SECTION-INT GYP, NR, 2X6

@BATHROOM

FIRE RATING / TEST # / STC / R-VALUE
NR / NA / N/A / NA

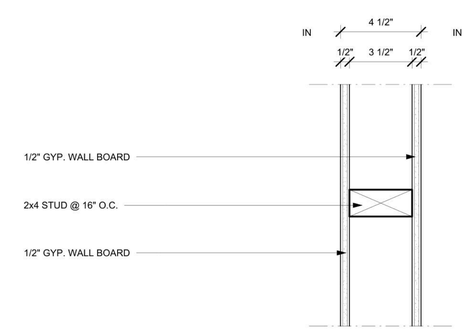


W01
SECTION-INT GYP, NR, 2X4

@LAUNDRY, COAT CLOSET

FIRE RATING / TEST # / STC / R-VALUE
NR / NA / N/A / NA

REVISIONS

**OWNER:**
**Shameka Shaheed**
4720 Chamberlin Cir. Elk Grove, CA 95757

**ARCHITECT:**
**AS Architecture Inc.**
2110 K St.
Sacramento, CA 95816
T: 510-883-3911
E: charles@asarchitectureinc.com

**NOT FOR CONSTRUCTION**

# 4720 Chamberlin Cir.

4720 Chamberlin Cir. Elk Grove, CA 95757

TITLE:
**Wall, Floor, & Roof Types**

| | |
|---|---|
| SET: | **Building Permit** |
| DATE: | **09/02/2025** |
| SCALE: | **3" = 1'-0"** |
| DRAWN | **AS Architecture Inc.** |

SHEET NUMBER
A5.1

| Window Schedule | | | | | |
|---|---|---|---|---|---|
| Type Mark | Type | Width | Height | Sill Height | Count |
| G02 | Sliding | 4' - 0" | 3' - 0" | 3' - 0" | 1 |
| G03 | Sliding | 3' - 0" | 2' - 0" | 4' - 8" | 1 |
| G05 | Sliding | 3' - 0" | 2' - 0" | 3' - 0" | 1 |

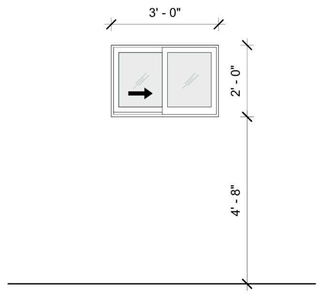


DOUBLE SLIDING G03

@BATHROOM

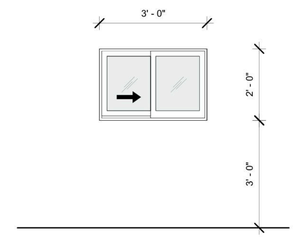


DOUBLE SLIDING G02

@KITCHEN

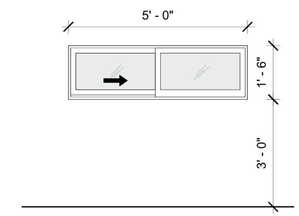


DOUBLE SLIDING G01

@ENTRANCE

| Door Schedule | | | | |
|---|---|---|---|---|
| Mark | Type | Width | Height | Count |
| D01 | Swing Solid Core Door | 2' - 10" | 6' - 8" | 1 |
| D02 | Pocket Hollow Core Door | 2' - 6" | 6' - 8" | 1 |
| D03 | Sliding Glass Door | 6' - 0" | 6' - 8" | 1 |
| D04 | Bifold Hollow Core Door | 2' - 4" | 6' - 8" | 2 |

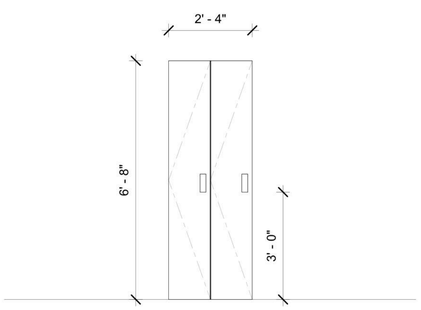


BIFOLD HOLLOW CORE DOOR D04

@LAUNDRY, STORAGE

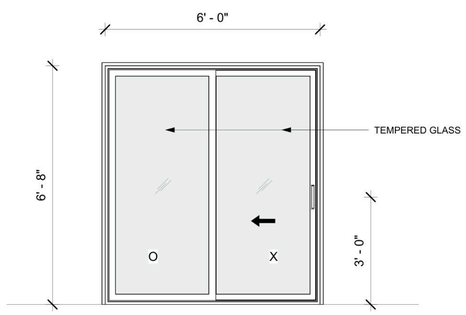


SLIDING GLASS DOOR D03

@LIVING

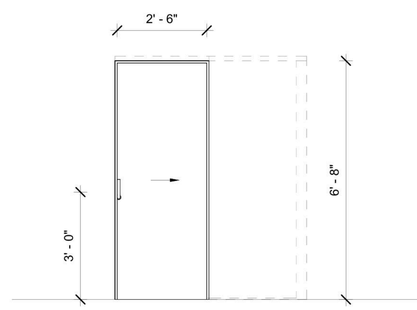


POCKET HOLLOW CORE DOOR D02

@BATHROOM

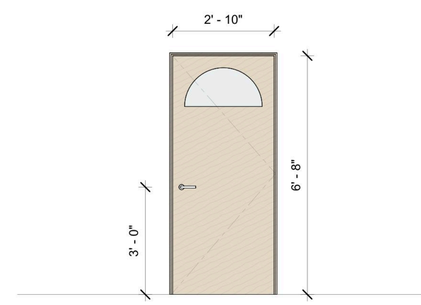


SWING SOLID CORE DOOR D01

@ENTRANCE

REVISIONS

**OWNER:**
**Shameka Shaheed**
4720 Chamberlin Cir. Elk Grove, CA 95757


**ARCHITECT:**
**AS Architecture Inc.**
2110 K St.
Sacramento, CA 95816
T: 510-883-3911
E: charles@asarchitectureinc.com


**NOT FOR CONSTRUCTION**

# 4720 Chamberlin Cir.

4720 Chamberlin Cir. Elk Grove, CA 95757

TITLE:
**Window & Door Types & Schedule**

| | |
|---|---|
| SET: | **Building Permit** |
| DATE: | **09/02/2025** |
| SCALE: | **1/2" = 1'-0"** |
| DRAWN | **AS Architecture Inc.** |

SHEET NUMBER
A8.1

# ELECTRICAL LEGEND

| | |
|---|---|
| | DUPLEX WALL OUTLET |
| R | DUPLEX OUTLET RANGE |
| GFI | DUPLEX WALL OUTLET<br>GFCI |
| 220V | DUPLEX WALL OUTLET<br>220V |
| WP | GFCI WATERPROOF DUPLEX WALL OUTLET<br>W/BUBBLE TYPE COVER |
| | DUPLEX FLOOR OUTLET |
| SD/CM | HARDWIRED SMOKE/CARBON MONOXIDE ALARM COMBO |
| | RECESSED DOWN LIGHT |
| | BATH FAN / LIGHT COMBO |
| | CEILING FAN |
| | WATER CONTROL VALVE |
| | INTERIOR LED TAPE |
| | EXTERIOR WALL MOUNTED UP/DOWN CYLINDER LIGHT |
| | SWITCH |
| 3 | SWITCH 3-WAY |
| M | SWITCH W/ MOTION SENSOR |
| P | SWITCH W/ PHOTOVOLTAIC SENSOR |
| V | SWITCH W/ VACANCY SENSOR |
| | HOSE BIBB W/ ANTI-BACKFLOW DEVICE |
| | ELECTRICAL DISCONNECT |

# ELECTRICAL NOTES

**1.** EACH BATHROOM SHALL BE MECHANICALLY VENTILATED WITH AN ENERGY STAR EXHAUST FAN, AND FAN MUST BE CONTROLLED BY A HUMIDITY CONTROL (4.506.1). EXHAUST FANS SHALL BE RATED 50 CFM MINIMUM PER CRC R303.3.1.

**2.** FOR COMBINATION EXHAUST FAN/LIGHT FIXTURES, EXHAUST FAN TO BE SWITCHED SEPARATELY PER CALIFORNIA ENERGY CODE 150.0(K)(2)(B).

**3.** ALL LUMINAIRES TO BE HIGH-EFFICACY (2022 CENC 150.0(K)(1)(A) & TABLE 150.0-A.).

**4.** AT LEAST ONE LUMINAIRE TO BE CONTROLLED BY A VACANCY SENSOR PER 2022 CENC150.0(K)(2)(J).

**5.** ALL SMOKE/CARBON MONOXIDE SMOKE ALARMS SHALL BE HARD-WIRED AND SHALL HAVE A BATTERY BACKUP POWER SUPPLY PER CRC R314.6 AND R315.

**6.** FOR KITCHEN:
- **A.** RECEPTACLES TO SERVE COUNTERTOP SURFACES SHALL BE SUPPLIED BY NOT FEWER THAN TWO SMALL APPLIANCE BRANCH CIRCUITS (CEC 210.52(B)(3)).
- **B.** RECEPTACLE OUTLETS SHALL BE INSTALLED SO THAT NO POINT ALONG THE WALL LINE IS MORE THAN 600 MM (24 IN.) MEASURED HORIZONTALLY FROM A RECEPTACLE OUTLET IN THAT SPACE.(CEC 210.52(C)(1),
- **C.** HIGH EFFICACY LIGHTING TO BE PROVIDED. MINIMUM 50% OF THE TOTAL RATED WATTAGE OF PERMANENTLY INSTALLED LIGHTING IN KITCHEN SHALL BE HIGH EFFICACY LUMINARIES.
- **D.** KITCHEN AREA EXHAUST FAN TO BE PROVIDED FOR LOCAL VENTILATION INDOOR AIR QUALITY REQUIREMENTS PER CALIFORNIA ENERGY CODE SECTION 150(O) AND ASHRAE 62.2.
- **E.** THE END OF EACH PENISULA AND EACH ISLAND SHOULD HAVE A RECEPTACLE PER 2022 CEC 210.52(C)(2) ALL COUNTER-TOP OUTLETS MUST BE GFCI PROTECTED PER 2022 CEC 210.52(C)(2).

**7.** AT LAUNDRY:
- A. GFCI-PROTECTED RECEPTACLE OUTLETS TO BE PROVIDED IN LAUNDRY AREAS PER 2022 CEC 210.8(A)(10).
- B. 220-VOLT 30-AMP DEDICATED CIRCUIT TO BE PROVIDED FOR CLOTHES DRYER (CEC 220.54).
- C. GFCI AT RECEPTACLE OUTLET TO BE LOCATED WITHIN 6-FT OF LAUNDRY SINK, IF APPLICABLE.

**8.** IN BATHROOMS, LAUNDRY, GARAGE, PANTRY, AND OTHER UTILITY ROOMS, ALL LIGHTING SHALL BE HIGH-EFFICACY. AT LEAST ONE LUMINAIRE SHALL BE CONTROLLED BY VACANCY SENSOR. (2022 CENC 150.0(K)(2)(J)).

**9.** ALL RECESSED LIGHTING INSTALLED IN INSULATED CEILINGS SHALL BE LISTED/RATED FOR INSULATION CONTACT (IC) AND LABELED AS AIR-TIGHT (AT) SEALED WITH A GASKET OR CAULK BETWEEN THE LIGHTING HOUSING AND CEILING (CENC, 150.0(K)(8)).

**10.** ALL INSTALLED LUMINAIRES SHALL BE HIGH EFFICACY MEETING THE REQUIREMENTS IN TABLE 150.0-A AND COMPLY WITH CENC 150.0(K)(1)(A).

**11.** ALL NEW CIRCUITS MUST BE ARC FAULT PROTECTED PER 2022 CEC 210.12.

**12.** EACH LIGHT FIXTURE AND CONTROL DEVICE SHALL COMPLY WITH 2016 MANDATORY RESIDENTIAL LIGHTING MEASURES. ITEMS SUCH AS AIR TIGHT (AT) AND IC RECESSED LIGHTS, HIGH EFFICIENCY LIGHTING, OCCUPANCY SENSORS, DIMMERS, ETC. MUST BE IDENTIFIED ON THE ELECTRICAL PLANS. ALL RECESSED CAN LIGHTS SHALL BE IC RATED AND CERTIFIED AS AIR TIGHT PER 2022 CENC SECTION 110.9.

**13.** ALL NEW 125 VOLT, 15- AND 20- AMPERE RECEPTACLE OUTLETS SHALL BE TAMPER RESISTANT RECEPTACLES PER 2022 CEC 406.4 (D)(4).

**14.** ALL LIVING AREAS RECEPTACLES SHOULD BE SPACED SO A LAMP WITH A 6' CORD CAN GO ANYWHERE ALONG A WALL. SECTIONS OF WALL 2' LONG OR LONGER SHOULD HAVE A RECEPTACLE. HALLWAYS MUST HAVE A RECEPTACLE EVERY 10' PER 2022 CEC 210.52.

**15.** KITCHEN AREA EXHAUST FAN OR HOOD OVER STOVE IS REQ'D PER 2022 CMC SECTION 508.5.1.5.

**16.** PROVIDE AT LEAST 1 GFCI RECEPTACLE WITHIN 3' OF THE OUTSIDE EDGE OF THE LAVATORY BASIN PER 2022 CEC 210.52 (D).

**17.** COMPLIANCE IS REQ'D WITH CALGREEN SECTION 4.506.1 FOR BATHROOM EXHAUST FANS. EACH BATHROOM SHALL BE MECHANICALLY VENTILATED WITH AN "ENERGY STAR" EXHAUST FAN, AND MUST BE CONTROLLED BY A HUMIDITY CONTROL. EXHAUST FANS SHALL BE RATED 50 CFM MINIMUM PER 2022 CRC R303.3.1.

**18.** LIGHT IN SHOWER TO BE "WP" PER 2022 CEC 410.10(A).

**19.** "WP" GFCI PROTECTED OUTLET WITH A BUBBLE TYPE COVER IS REQ'D AT THE FRONT AND REAR OF THE RESIDENCE PER 2022 CEC 210.52(E)(1).

**20.** SWITCH AND LIGHT IS REQ'D AT EACH EXTERIOR DOOR PER 2022 CEC 210.70.

**21.** HARDWIRED SMOKE DETECTORS/CARBON MONOXIDE ALARMS ARE REQ'D IN EACH BEDROOM, EACH SPACE OUTSIDE A BEDROOM, AND AT EACH FLOOR LEVEL PER 2022 CRC R314, R315, CITY OF BERKELEY AND BERKELEY FIRE DEPARTMENT.

**22.** RECEPTACLE OUTLET TO POWER THE GARAGE DOOR OPENER PER 2022 CEC 210.8(A)(2).

**23.** GFCI PROTECTED OUTLET IS REQ'D TO BE LOCATED WITHIN 6' OF THE LAUNDRY SINK PER 2022 CEC 210.8(A)(7).

24. EVERY DWELLING UNIT SHALL BE PROVIDED WITH HEATING FACILITIES CAPABLE OF MAINTAINING A ROOM TEMPERATURE OF NOT LESS THAN 68-DEGREE F AT A POINT 3 FEET ABOVE THE FLOOR AND 2 FEET FROM EXTERIOR WALL IN HABITABLE ROOMS PER CRC R303.10.

25. ALL LIGHT SOURCES INSTALLED IN CEILING RECESSED DOWNLIGHT LUMINAIRES SHALL BE MARKED AS "JA8-2019" PER CENC 150.0(K)(1)(C).

26. ALL LIGHT SOURCES IN ENCLOSED OR RECESSED LUMINAIRES SHALL BE MARKED "JA8-2019-E" FOR ELEVATED TEMPERATURE PER CENC 150.0(K)(1)(H).

27. INDICATE DIMMER OR VACANCY SENSORS FOR LUMINAIRES IN SPACES OTHER THAN BATHROOMS, GARAGES, LAUNDRY ROOMS, AND UTILITY ROOMS PER CENC 150.0(K)(2)(J).

28. MOTION SENSOR AND PHOTOCELL CONTROLS ARE REQUIRED FOR EXTERIOR LUMINAIRES PER CENC 150.0(K)(3).

29. GFCI PROTECTION FOR ALL EXTERIOR RECEPTACLES.

30. RECEPTACLE OUTLET, SWITCH, AND CONTROL SHALL NOT BE INSTALLED MORE THAN 48" OR LESS THAN 15" ABOVE FINISH FLOOR PER R311.3.2.

31. SMOKE AND CARBON MONOXIDE ALARMS SHALL BE INTERCONNECTED UNLESS BY EXCEPTION PER R314.4 AND R315.5

32. COMBINATION ALARMS SHALL BE UL 217 AND UL 2034 LISTED AND APPROVED FOR USE BY THE STATE FIRE MARSHAL PER R314.1.1

# ESS NOTES:

ALL SINGLE-FAMILY RESIDENCES SHALL BE ESS READY OR INSTALL AN ESS SYSTEM PER CENC 150.0(S).

**A.** A MINIMUM OF FOUR BRANCH CIRCUITS SHALL BE IDENTIFIED AND HAVE THEIR SOURCE OF SUPPLY COLLOCATED AT A SINGLE PANELBOARD SUITABLE TO BE SUPPLIED BY THE ESS. AT LEAST ONE CIRCUIT SHALL SUPPLY THE REFRIGERATOR, ONE LIGHTING CIRCUIT SHALL BE LOCATED NEAR THE PRIMARY EGRESS AND AT LEAST ONE CIRCUIT SHALL SUPPLY A SLEEPING ROOM RECEPTACLE OUTLET.

**B.** SUFFICIENT SPACE SHALL BE RESERVED TO ALLOW FUTURE INSTALLATION OF A SYSTEM ISOLATION EQUIPMENT/TRANSFER SWITCH WITHIN 3 FEET OF THE MAIN PANELBOARD. RACEWAYS SHALL BE INSTALLED BETWEEN THE PANELBOARD AND THE SYSTEM ISOLATION EQUIPMENT/TRANSFER SWITCH LOCATION TO ALLOW THE CONNECTION OF BACKUP POWER SOURCE.

**C.** THE MAIN PANELBOARD SHALL HAVE A MINIMUM BUSBAR RATING OF 225 AMPS, AND

**D1.** ESS READY INTERCONNECTION EQUIPMENT WITH A MINIMUM BACKED-UP CAPACITY OF 60 AMPS AND A MINIMUM OF FOUR ESS-SUPPLIED BRANCH CIRCUITS, **OR**

**D2.** A DEDICATED RACEWAY FROM THE MAIN SERVICE TO A PANELBOARD (SUBPANEL) THAT SUPPLIES THE BRANCH CIRCUITS IN CENC 150.0(S)(2). ALL BRANCH CIRCUITS ARE PERMITTED TO BE SUPPLIED BY THE MAIN SERVICE PANEL PRIOR TO THE INSTALLATION OF AN ESS. THE TRADE SIZE OF THE RACEWAY SHALL BE NOT LESS THAN 1 INCH. THE PANELBOARD THAT SUPPLIES THE BRANCH CIRCUITS (SUBPANEL) MUST BE LABELED "SUBPANEL SHALL INCLUDE ALL BACKED UP LOAD CIRCUITS."

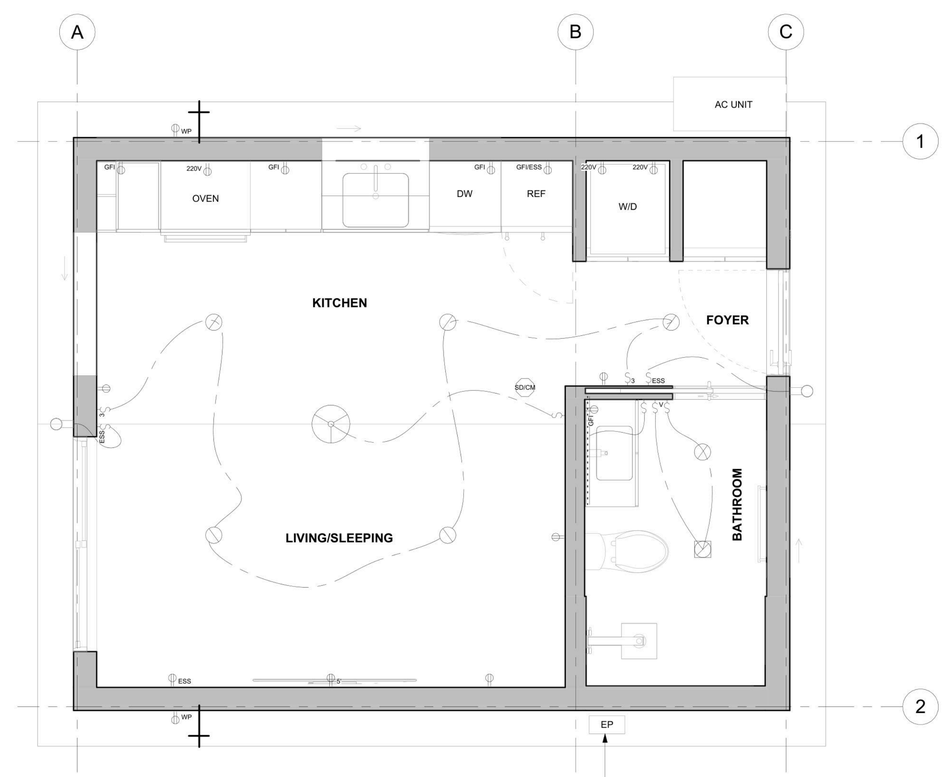


2 Level 1 RCP
1/2" = 1'-0"

REVISIONS

**OWNER:**
**Shameka Shaheed**
4720 Chamberlin Cir. Elk Grove, CA 95757


**ARCHITECT:**
**AS Architecture Inc.**
2110 K St.
Sacramento, CA 95816
T: 510-883-3911
E: charles@asarchitectureinc.com


**NOT FOR CONSTRUCTION**

**4720 Chamberlin Cir.**
4720 Chamberlin Cir. Elk Grove, CA 95757

TITLE:
**Reflected Ceiling Plan**

| | |
|---|---|
| SET: | **Building Permit** |
| DATE: | **09/02/2025** |
| SCALE: | **As indicated** |
| DRAWN | **AS Architecture Inc.** |

SHEET NUMBER
RCP1