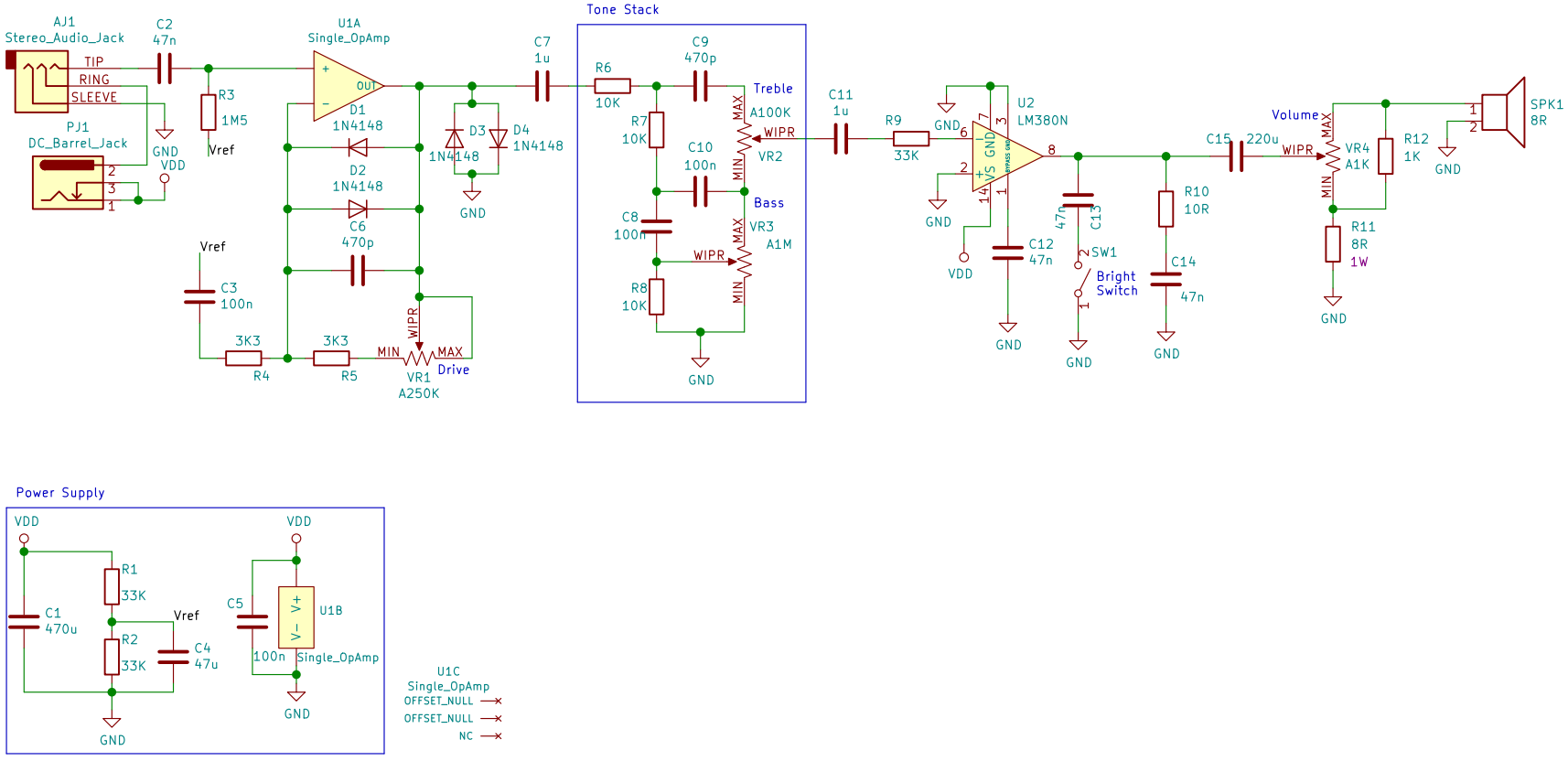

Feller Audio Designs

Sheet: /

File: Feller380.sch

Title: Feller380 Amp

Size: A4	Date: 2019-08-18	**Rev:**
KiCad E.D.A. eeschema (5.1.2)-1		Id: 1/1