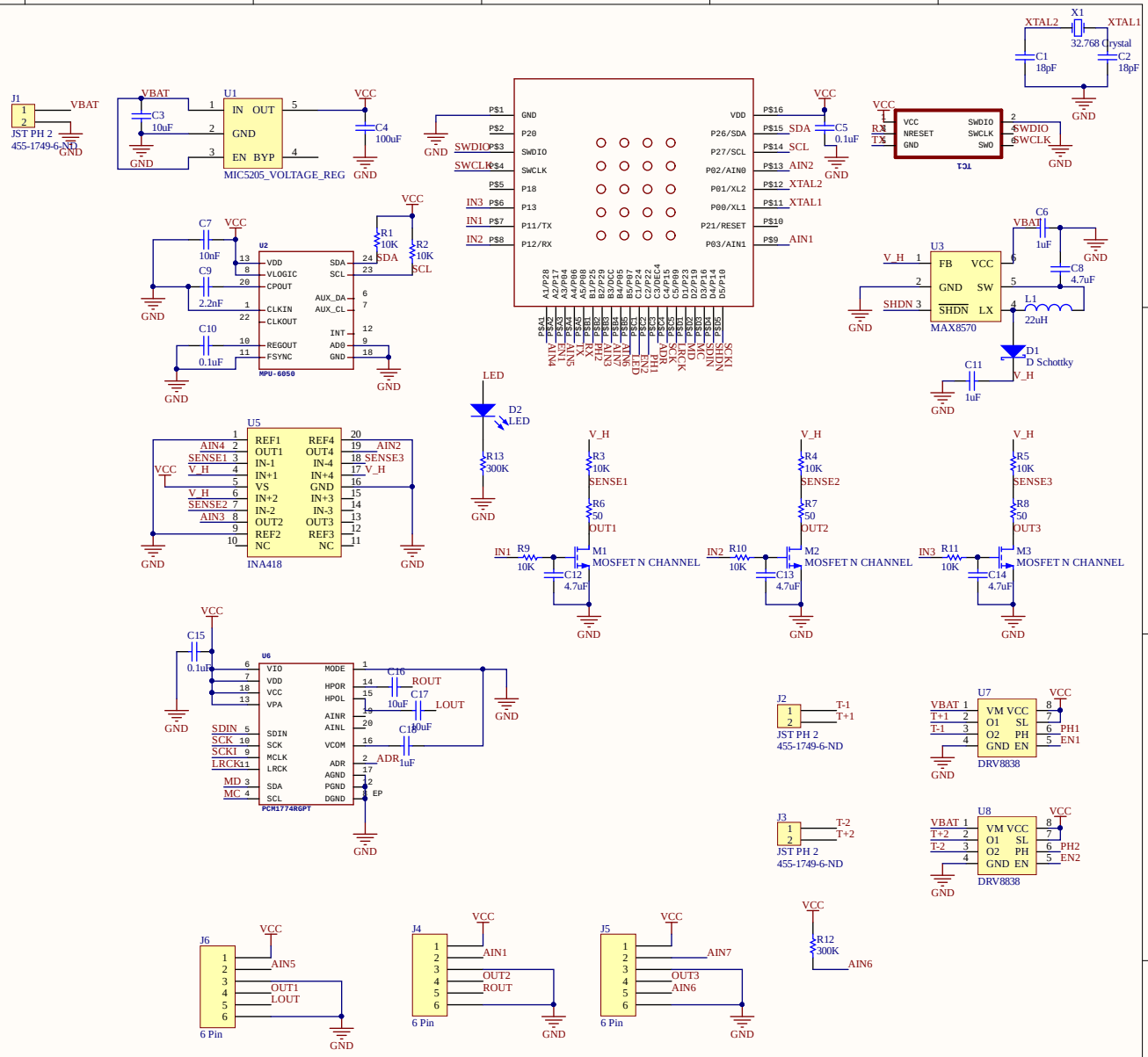

Title		
Size A3	Number	Revision
Date: 8/2/2018		Sheet of
File: D:\Projects\..\V1.SchDoc		Drawn By:

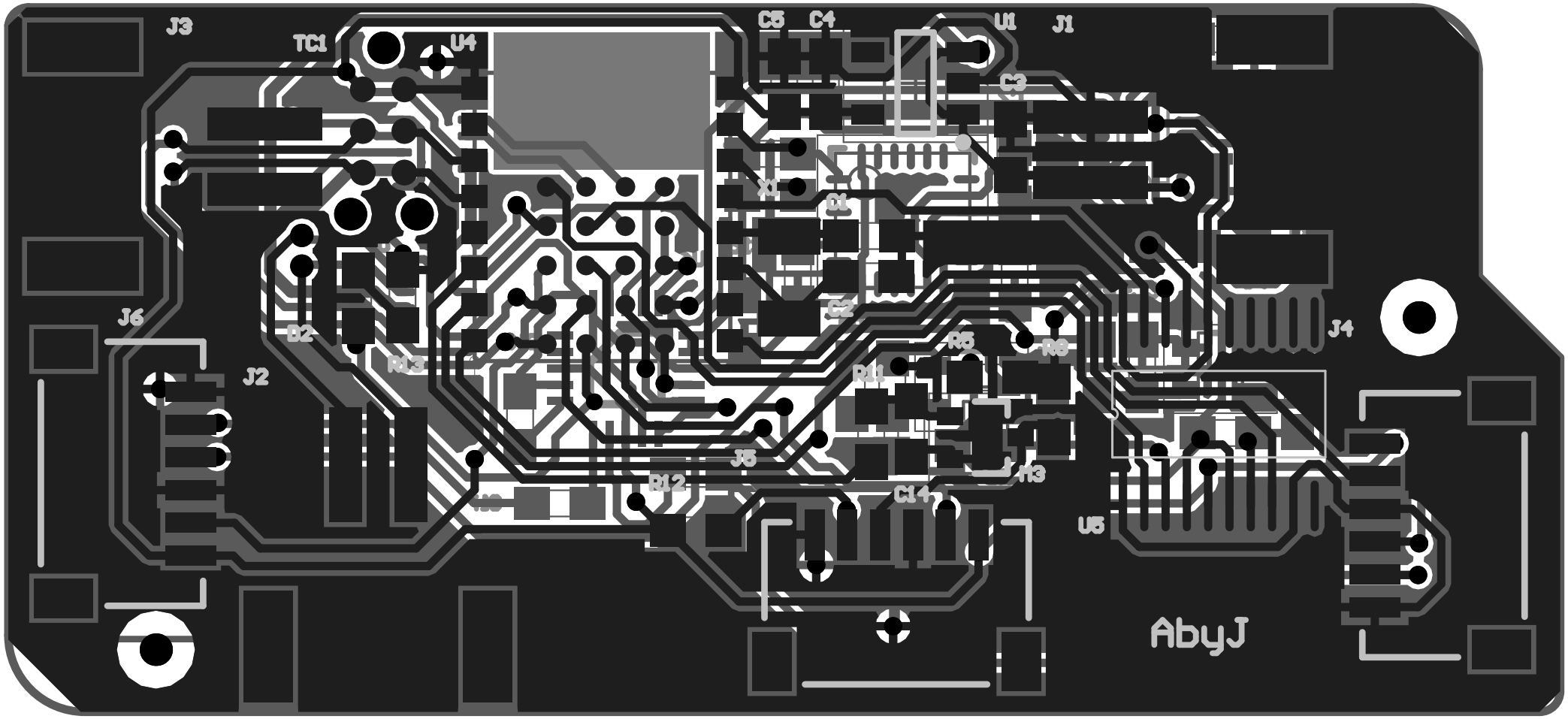
J3
TC1
U4
C5
C4
U1
J1
C3
X1
D1
C2
J6
D2
J2
R13
R5
R6
R11
J4
J5
R12
R3
C14
U5
AbyJ