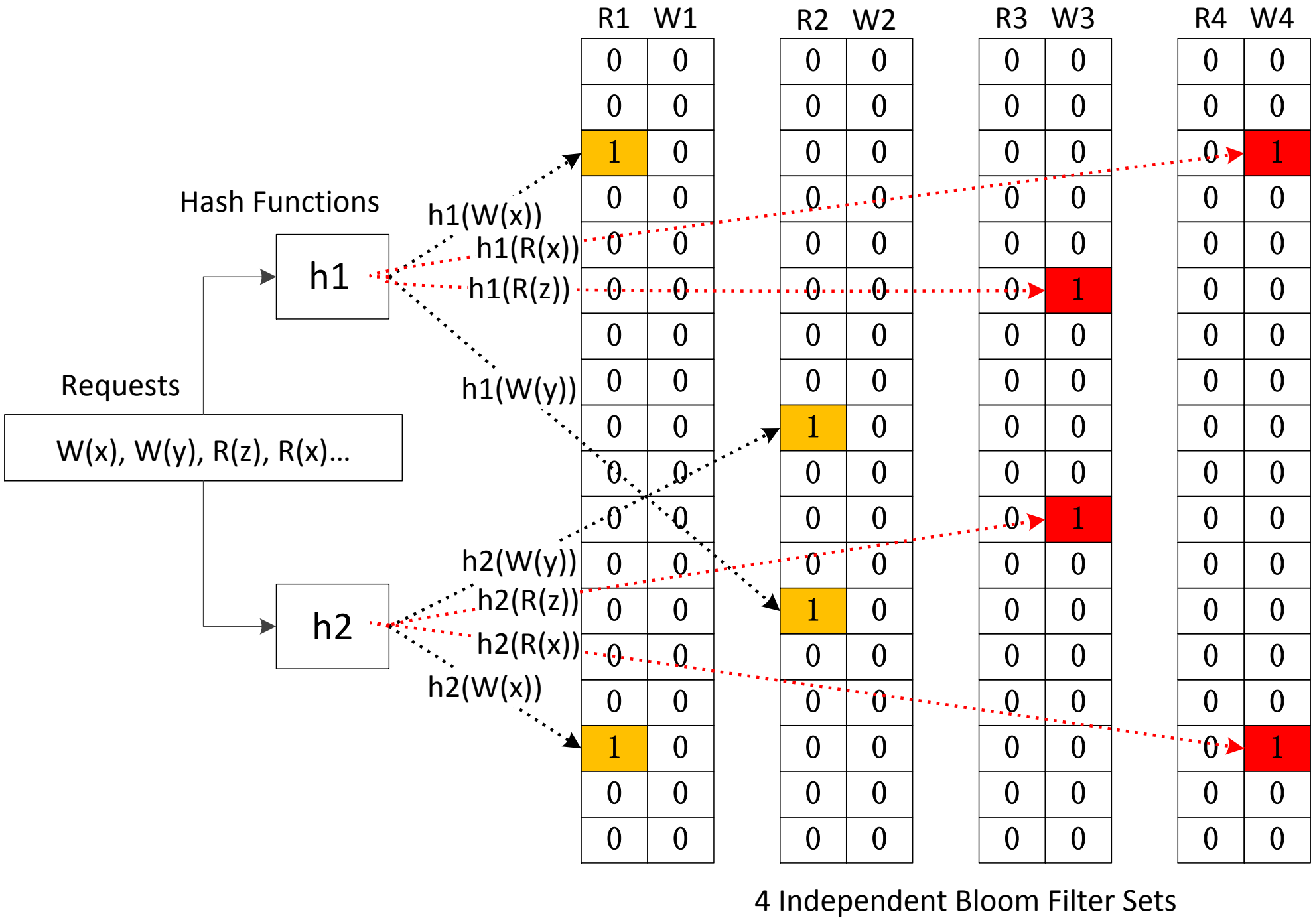
R1 W1
R2 W2
R3 W3
R4 W4
Hash Functions
h1
h2
Requests
W(x), W(y), R(z), R(x)...
h1(W(x))
h1(R(x))
h1(R(z))
h1(W(y))
h2(W(y))
h2(R(z))
h2(R(x))
h2(W(x))
4 Independent Bloom Filter Sets