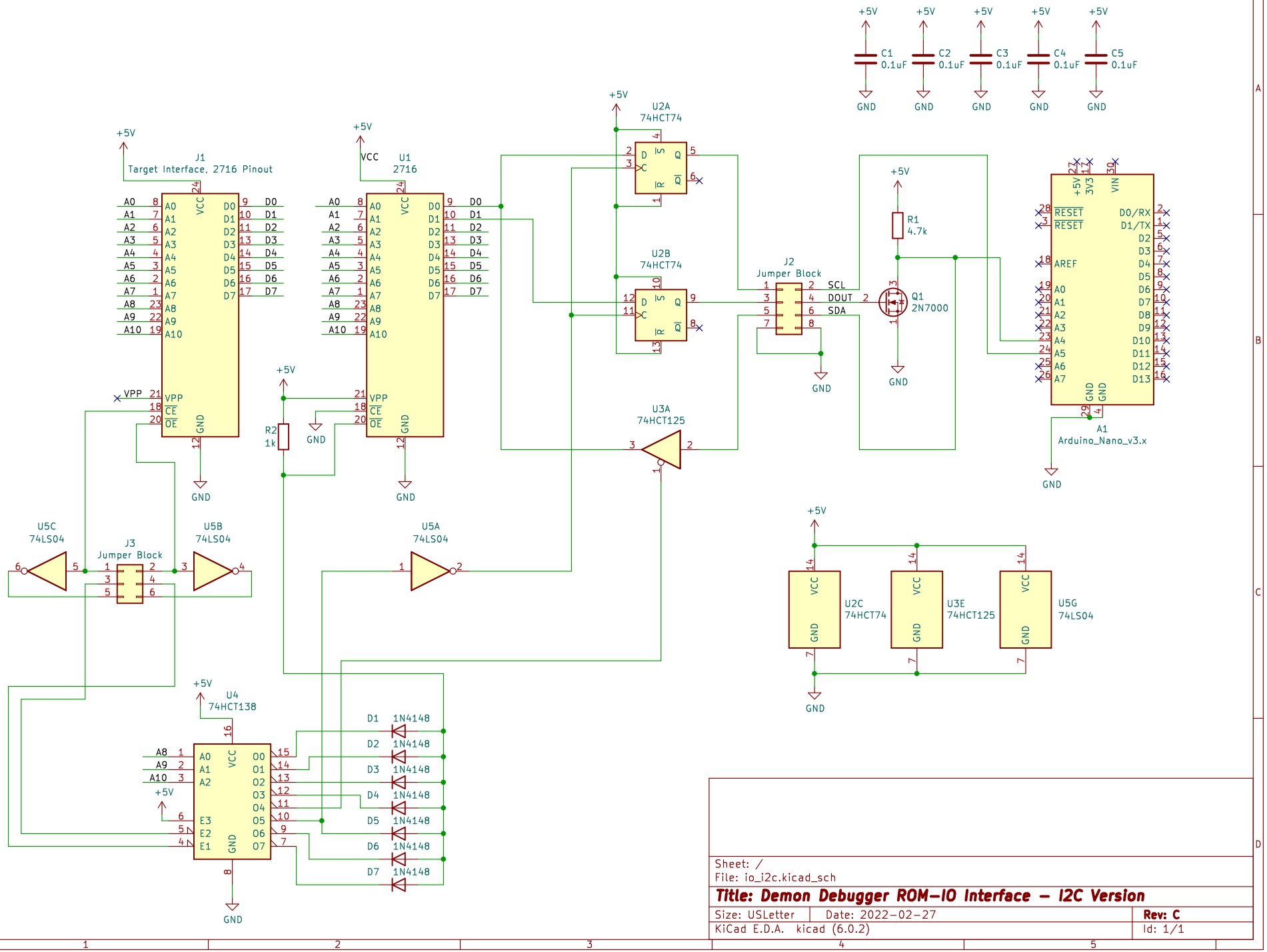

Sheet: /
File: io_i2c.kicad_sch

Title: Demon Debugger ROM-IO Interface - I2C Version

Size: USLetter	Date: 2022-02-27	Rev: C
KiCad E.D.A. kicad (6.0.2)		Id: 1/1