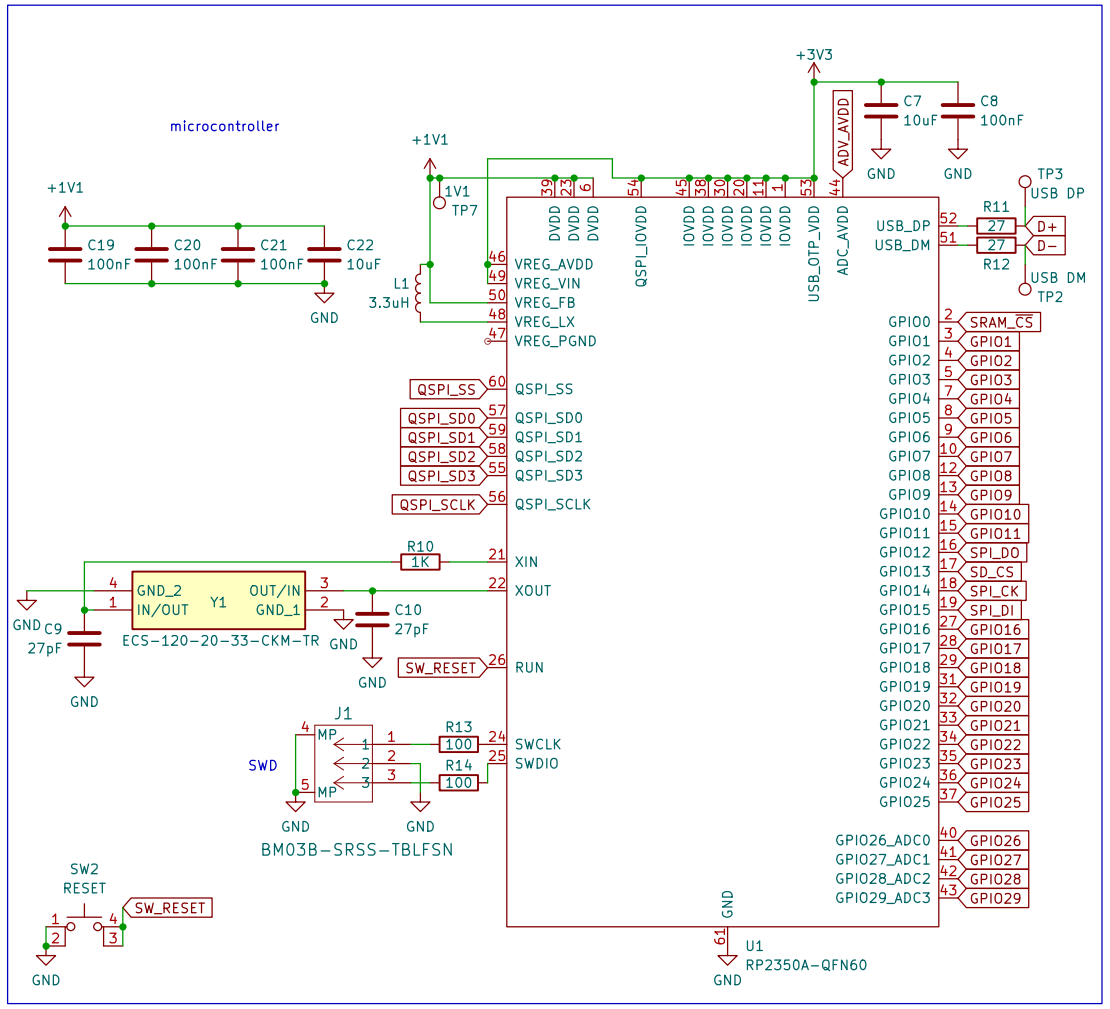
microcontroller
+1V1
C19 100nF
C20 100nF
C21 100nF
C22 10uF
GND
L1 3.3uH
TP7
+3V3
ADV_AVDD
C7 10uF
C8 100nF
TP3 USB DP
TP2 USB DM
R11 27
R12 27
USB_DP
USB_DM
VREG_AVDD
VREG_VIN
VREG_FB
VREG_LX
VREG_PGND
QSPI_SS
QSPI_SD0
QSPI_SD1
QSPI_SD2
QSPI_SD3
QSPI_SCLK
R10 1K
XIN
XOUT
GND_2
IN/OUT
OUT/IN
GND_1
Y1
ECS-120-20-33-CKM-TR
C9 27pF
C10 27pF
SW_RESET
RUN
J1
SWD
R13 100
R14 100
SWCLK
SWDIO
BM03B-SRSS-TBLFSN
SW2 RESET
U1
RP2350A-QFN60
SRAM_CS
SPI_DO
SD_CS
SPI_CK
SPI_DI
GPIO26_ADC0
GPIO27_ADC1
GPIO28_ADC2
GPIO29_ADC3

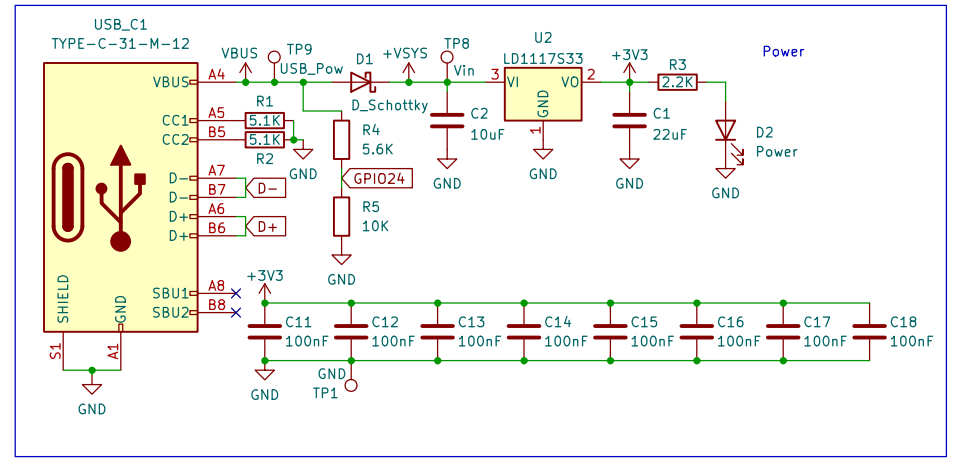
Power
USB_C1
TYPE-C-31-M-12
VBUS
TP9 USB_Pow
D1 D_Schottky
+VSYS
TP8 Vin
U2
LD1117S33
VI
VO
GND
+3V3
R3 2.2K
C1 22uF
D2 Power
R1 5.1K
R2 5.1K
R4 5.6K
GPIO24
R5 10K
C2 10uF
CC1
CC2
D-
D+
SBU1
SBU2
SHIELD
S1
A1
C11 100nF
C12 100nF
C13 100nF
C14 100nF
C15 100nF
C16 100nF
C17 100nF
C18 100nF
TP1

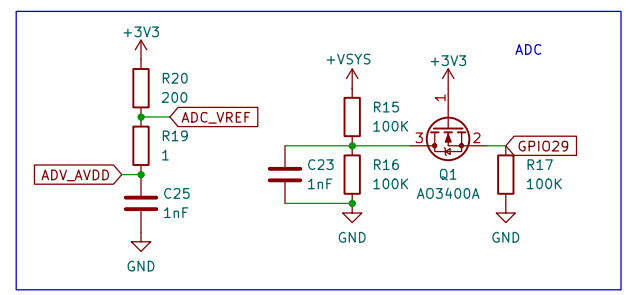
ADC
+3V3
R20 200
ADC_VREF
R19 1
ADV_AVDD
C25 1nF
+VSYS
R15 100K
R16 100K
C23 1nF
Q1 AO3400A
GPIO29
R17 100K
GND

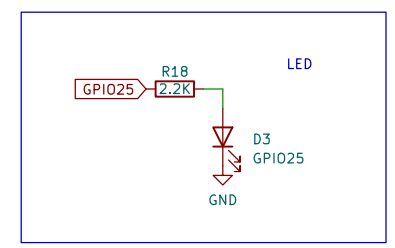
LED
GPIO25
R18 2.2K
D3 GPIO25
GND

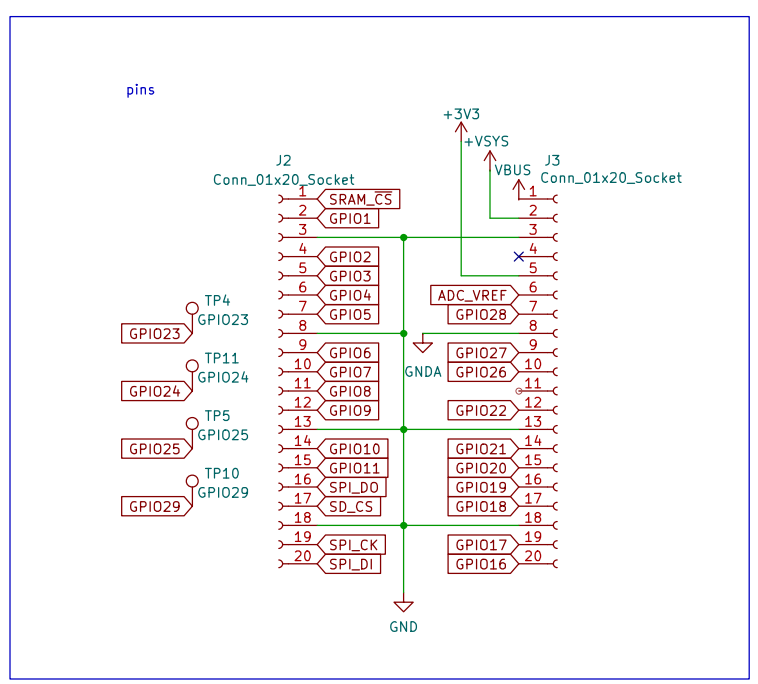
pins
J2
Conn_01x20_Socket
J3
Conn_01x20_Socket
+3V3
+VSYS
VBUS
SRAM_CS
GPIO1
GPIO2
GPIO3
GPIO4
GPIO5
GPIO6
GPIO7
GPIO8
GPIO9
GPIO10
GPIO11
SPI_DO
SD_CS
SPI_CK
SPI_DI
ADC_VREF
GPIO28
GPIO27
GPIO26
GPIO22
GPIO21
GPIO20
GPIO19
GPIO18
GPIO17
GPIO16
GNDA
TP4 GPIO23
TP11 GPIO24
TP5 GPIO25
TP10 GPIO29
GND

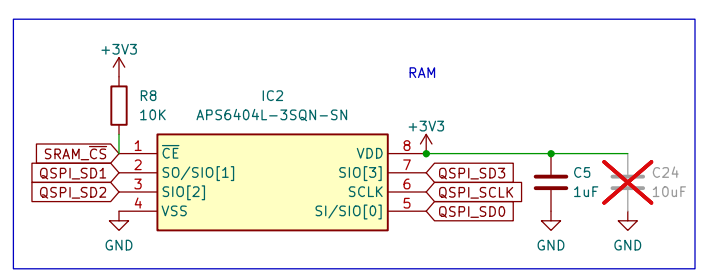
RAM
+3V3
R8 10K
IC2
APS6404L-3SQN-SN
SRAM_CS
QSPI_SD1
QSPI_SD2
CE
SO/SIO[1]
SIO[2]
VSS
VDD
SIO[3]
SCLK
SI/SIO[0]
QSPI_SD3
QSPI_SCLK
QSPI_SD0
C5 1uF
C24 10uF
GND

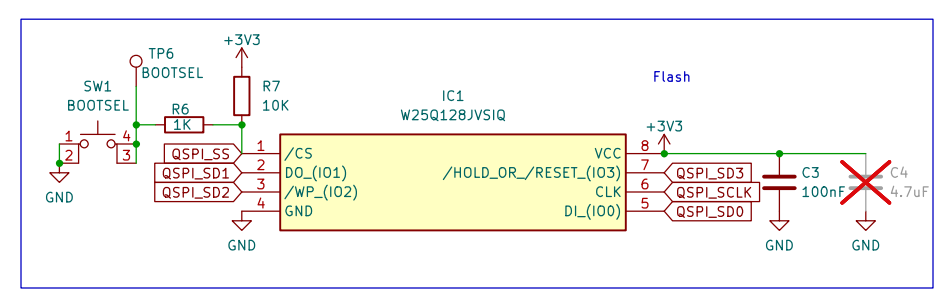
Flash
TP6 BOOTSEL
SW1 BOOTSEL
R6 1K
+3V3
R7 10K
IC1
W25Q128JVSIQ
QSPI_SS
QSPI_SD1
QSPI_SD2
/CS
DO_(IO1)
/WP_(IO2)
GND
VCC
/HOLD_OR_/RESET_(IO3)
CLK
DI_(IO0)
QSPI_SD3
QSPI_SCLK
QSPI_SD0
C3 100nF
C4 4.7uF

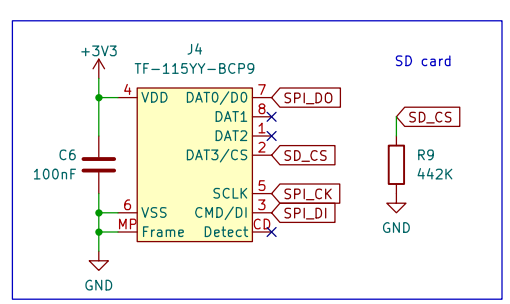
SD card
+3V3
J4
TF-115YY-BCP9
C6 100nF
VDD
DAT0/DO
DAT1
DAT2
DAT3/CS
SCLK
VSS
CMD/DI
MP
Frame Detect
CD
SPI_DO
SD_CS
SPI_CK
SPI_DI
R9 442K
GND