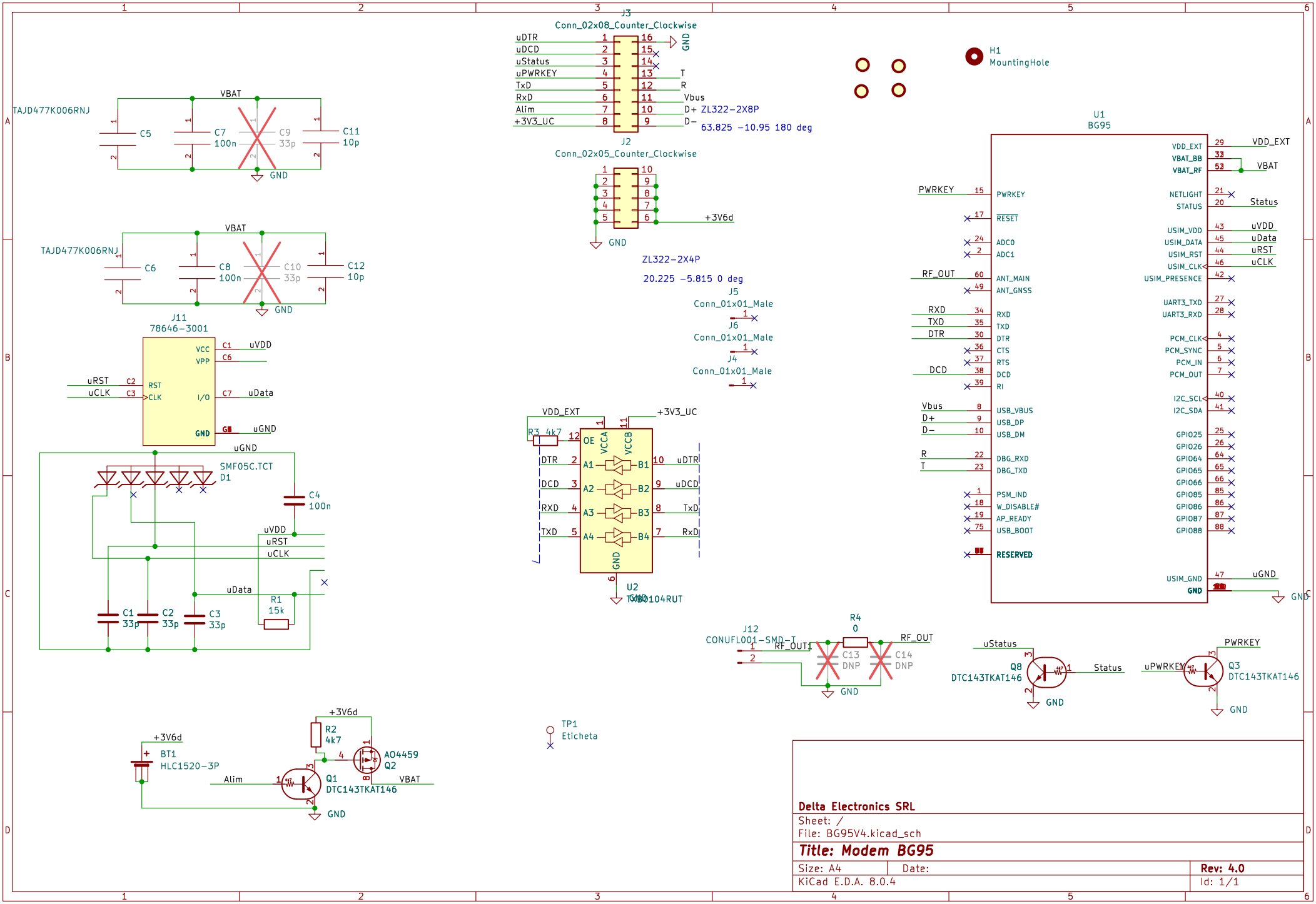

Delta Electronics SRL

Sheet: /

File: BG95V4.kicad_sch

Title: Modem BG95

Size: A4	Date:	**Rev: 4.0**
KiCad E.D.A. 8.0.4		Id: 1/1