Page 2

LPCXpresso connector and Reset

Page 3

Expansion connectors

Page 4

Optional LPC1xxx and JTAG connectors

Page 5

USB, CAN, ETH, RS422/485 interfaces

Page 6

Direct digital I/O peripherals

Page 7

Analog peripherals

Page 8

I2C peripherals

Page 9

SPI peripherals

Page 10

Shared SPI/I2C peripherals

Page 11

USB-to-UART bridge, RF-module, power supply

UL = UnLoaded = normally not mounted component.

Default jumper settings are indicated in the schematic.
However, always check jumper positions on actual boards
since there is no guarantee that all jumpers are in default place.

Rev B

Added J60/J61/R216/R217 (page 5) for USB Host i/f.
Added J62 (page 6) to support LPC17xx bootload.
Added J58 (page 10) to support spi i/f to OLED or mbed.

Rev A

First rev

(C) Embedded Artists AB

TITLE: LPCXpresso Base Board rev B

Document Number: | REV:

Date: 2010-09-25 23:08:22 | Sheet: 1/11

Reset generation

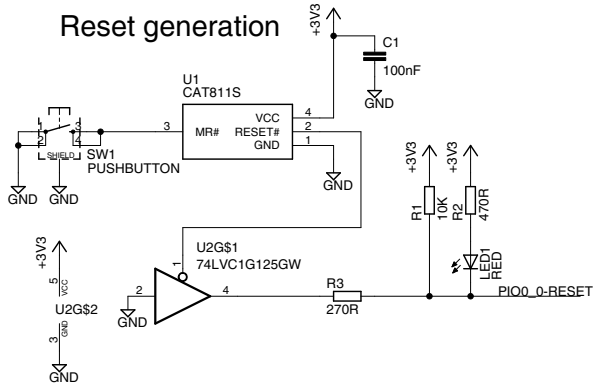

LPCXpresso and mbed connector
(pin naming follow LPCXpresso module)

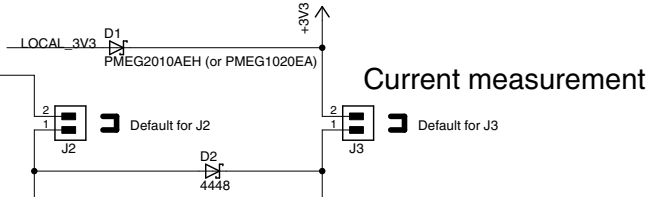

Battery Connector
Note: battery not included!

Current measurement

Dual row holes (2x27), 100 mil spacing

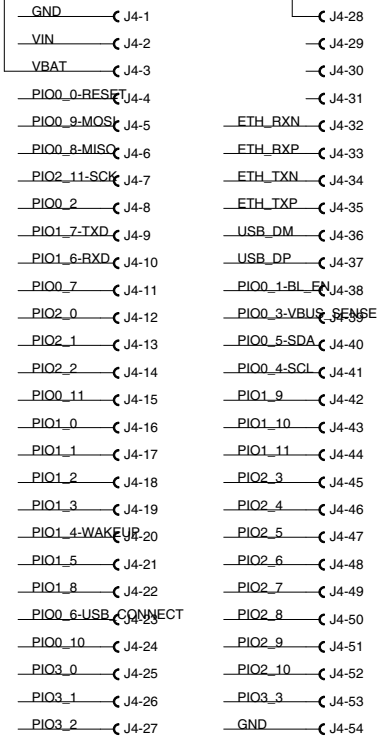

mbed module	LPCXpresso LPC1768		LPCXpresso LPC1343/1114
GND	GND		GND
VIN (4.5-14V)	VIN (4.5-5.5V)		VIN (4.5-5.5V)
VB (battery supply)	VB (battery supply)		not used
nR (reset)	RESET_N		Reset / PIO0_0
SPI1-MOSI	P0.9	MOSI1	PIO0_9 / MOSI / CT16B0_MAT1 / SWO
SPI1-MISO	P0.8	MISO1	PIO0_8 / MISO/CT16B_MAT0
SPI1-SCK	P0.7	SCK1	PIO2_11 / SCK
GPIO	P0.6	SSEL1	PIO0_2 / SSEL / CT16B0_CAP0
UART1-TX / I2C1-SDA	P0.0	TXD3/SDA1	PIO1_7 / TXD / CT32B0_MAT1
UART1-RX / I2C1-SCL	P0.1	RXD3/SCL1	PIO1_6 / RXD / CT32B0_MAT0
SPI2-MOSI	P0.18	MOSI0	PIO0_7 / CTS
SPI2-MISO	P0.17	MISO0	PIO2_0 / DTR
SPI2-SCL / UART2-TX	P0.15	TXD1/SCK0	PIO2_1 / DSR
UART2-RX	P0.16	RXD1/SSEL0	PIO2_2 / DCD
AIN0	P0.23	AD0.0	TDI / PIO0_11 / AD0 / CT32B0_MAT3
AIN1	P0.24	AD0.1	TMS / PIO1_0 / AD1 / CT32B1_CAP0
AIN2	P0.25	AD0.2	TDO / PIO1_1 / AD2 / CT32B1_MAT0
AIN3 / AOUT	P0.26	AD0.3/AOUT	TRST / PIO1_2 / AD3 / CT32B1_MAT1
AIN4	P1.30	AD0.4	SWDIO / PIO1_3 / AD4 / CT32B1_MAT2
AIN5	P1.31	AD0.5	PIO1_4 / AD5 / CT32B1_MAT3 / WAKEUP
	P0.2		PIO1_5 / RTS / CT32B0_CAP0
	P0.3		PIO1_8 / CT16B1_CAP0
	P0.21		PIO0_6 / USB_CONNECT / SCK
	P0.22		SWCLK / PIO0_10 / SCK / CT16B0_MAT2
	P0.27		PIO3_0
	P0.28		PIO3_1
	P2.13		PIO3_2

LPCXpresso LPC1343/1114		LPCXpresso LPC1768		mbed module
VOUT (+3.3V out) if self powered, else +3.3V input		VOUT (+3.3V out) if self powered, else +3.3V input		VOUT (3.3V out)
not used		not used		VU (5.0V USB out)
not used		not used		IF+
not used		not used		IF-
not used		RD-		RD- (Ethernet)
not used		RD+		RD+ (Ethernet)
not used		TD-		TD- (Ethernet)
not used		TD+		TD+ (Ethernet)
USB_DM	PIO2_4 for LPC1114	USB-D-		D- (USB)
USB_DP	PIO2_5 for LPC1114	USB-D+		D+ (USB)
PIO0_1 / CLKOUT / CT32B0_MAT2 / USB_FTOGGLE		P0.4	CAN_RX2	CAN-RD
PIO0_3 / USB_VBUS		P0.5	CAN_TX2	CAN-TD
PIO0_5 / SDA		P0.10	TXD2/SDA2	UART3-TX / I2C2-SDA
PIO0_4 / SCL		P0.11	RXD2/SCL2	UART3-RX / I2C2-SCL
PIO1_9 / CT16B1_MAT0		P2.0	PWM1.1	PWMOUT0
PIO1_10 / AD6 / CT16B1_MAT1		P2.1	PWM1.2	PWMOUT1
PIO1_11 / AD7		P2.2	PWM1.3	PWMOUT2
PIO2_3 / RI		P2.3	PWM1.4	PWMOUT3
PIO2_4	PIO3_4 for LPC1114	P2.4	PWM1.5	PWMOUT4
PIO2_5	PIO3_5 for LPC1114	P2.5	PWM1.6	PWMOUT5
PIO2_6		P2.6		
PIO2_7		P2.7		
PIO2_8		P2.8		
PIO2_9		P2.10		
PIO2_10		P2.11		
PIO3_3		P2.12		
GND		GND		

Note: 19 pins between rows on LPC1768 are not connected.

(C) Embedded Artists AB

TITLE: LPCXpresso Base Board rev B

Document Number: | REV:

Date: 2010-09-25 23:08:22 | Sheet: 2/11

Expansion Connector

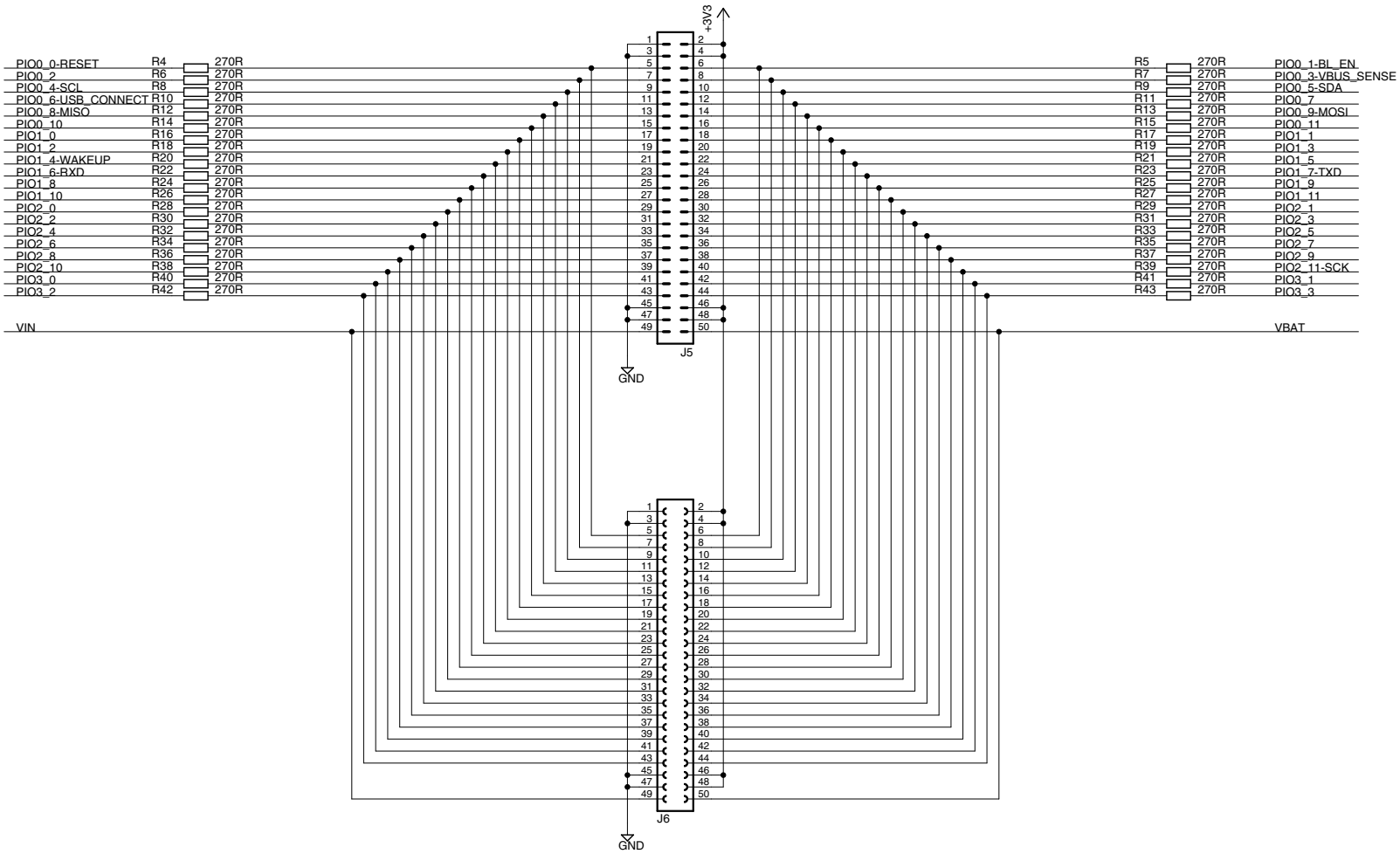

Expansion Connector for Breadboard

Embedded Artists

(C) Embedded Artists AB

TITLE: LPCXpresso Base Board rev B	
Document Number:	REV:
Date: 2010-09-25 23:08:22	Sheet: 3/11

Optional LPC1113/LPC1343 for standalone boards
(placed inbetween LPCXpresso/mbed connector)

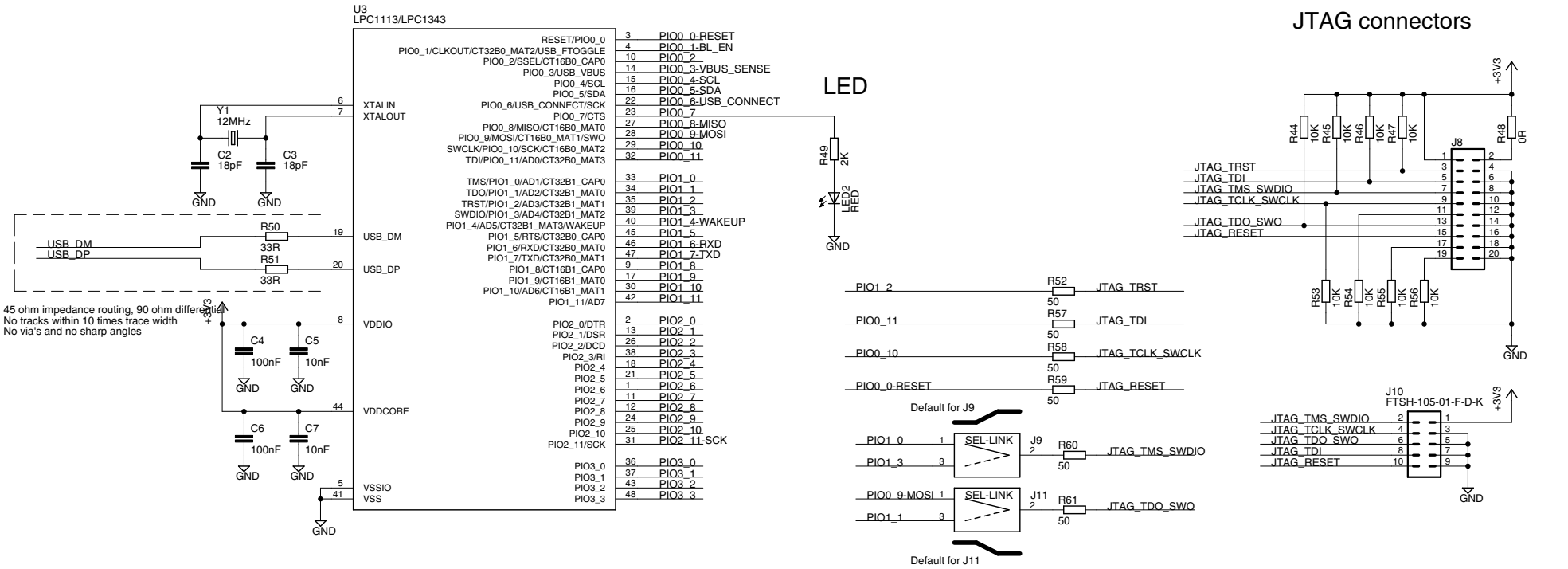

(C) Embedded Artists AB

TITLE: LPCXpresso Base Board rev B	
Document Number:	REV:
Date: 2010-09-25 23:08:22	Sheet: 4/11

mbed/LPC17xx module interfaces (Ethernet and CAN), common USB interface and RS422/485 interface

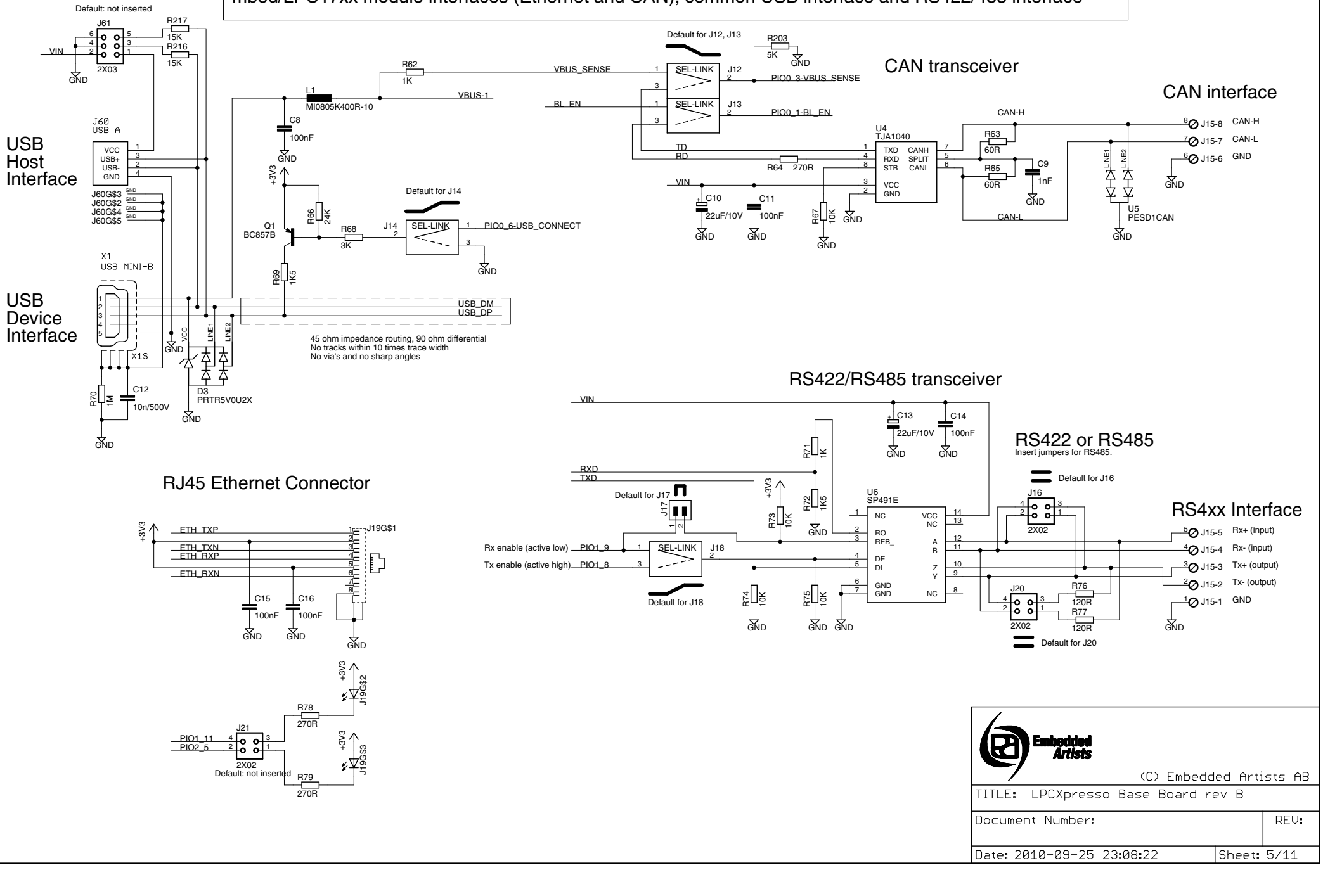

(C) Embedded Artists AB

TITLE: LPCXpresso Base Board rev B	
Document Number:	REV:
Date: 2010-09-25 23:08:22	Sheet: 5/11

Direct Digital IO peripherals

Joystick Switch

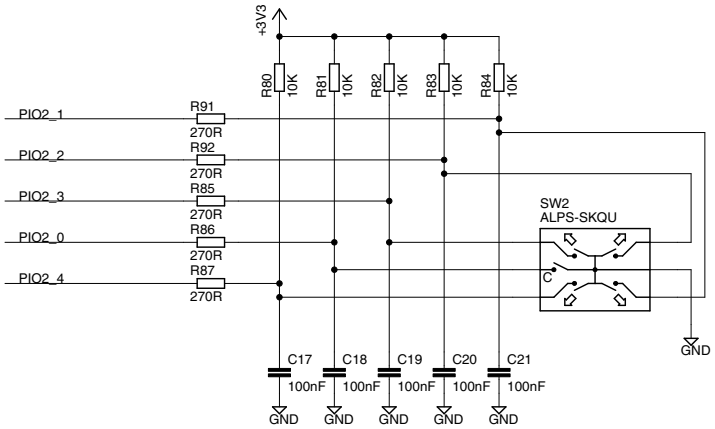

Bootloader Enable (P0.1)

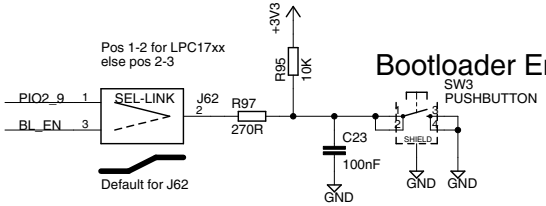

Wakeup (P1.4)

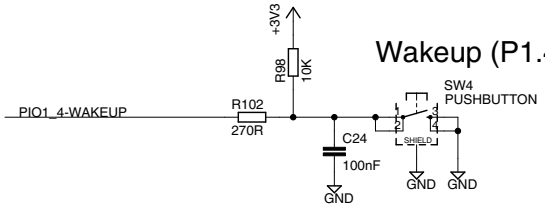

Rotary switch - Quadrature signals

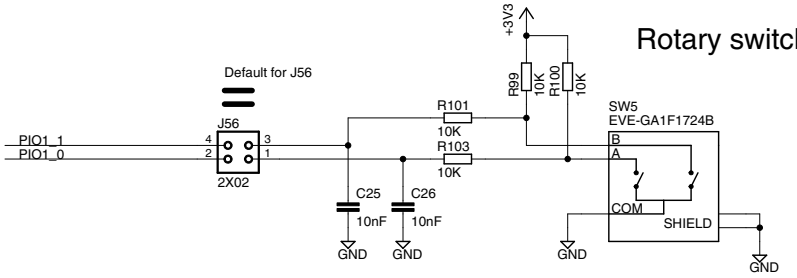

RGB-LED

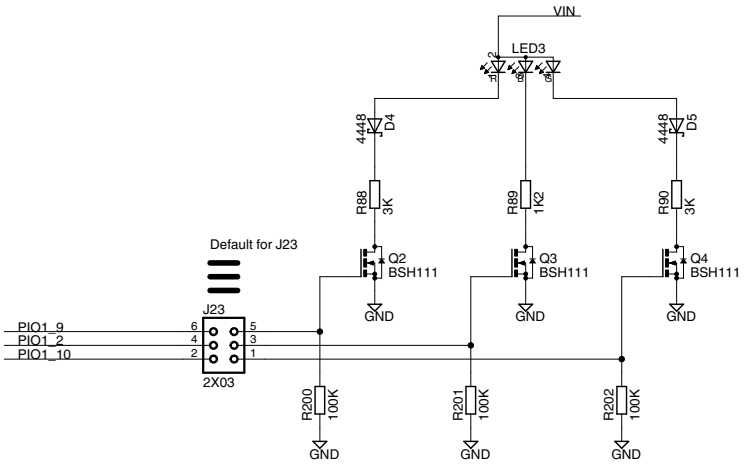

Temp sensor: MAX6576 (temp-to-period)

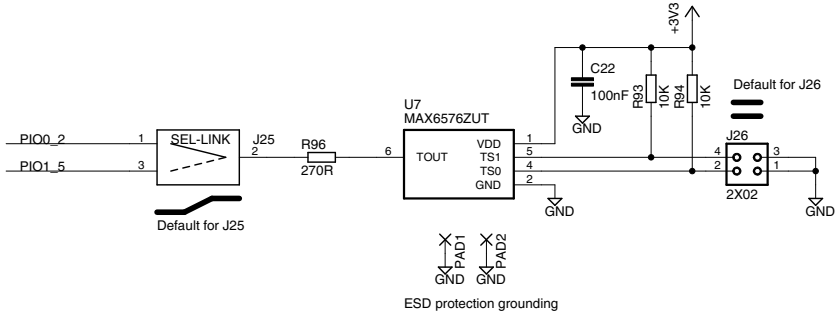

(C) Embedded Artists AB

TITLE: LPCXpresso Base Board rev B	
Document Number:	REV:
Date: 2010-09-25 23:08:22	Sheet: 6/11

Analog peripherals

Analog Input

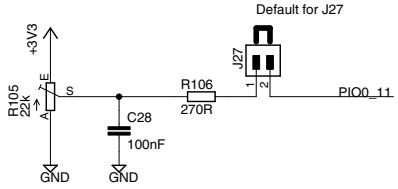

BNC input (oscilloscope probe)

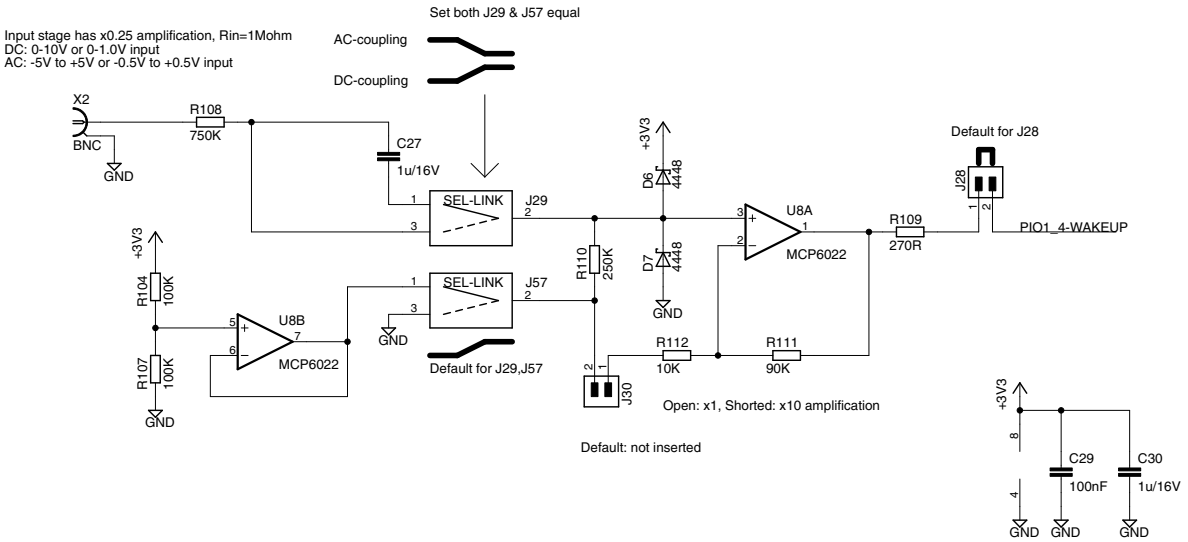

PWM LP filter

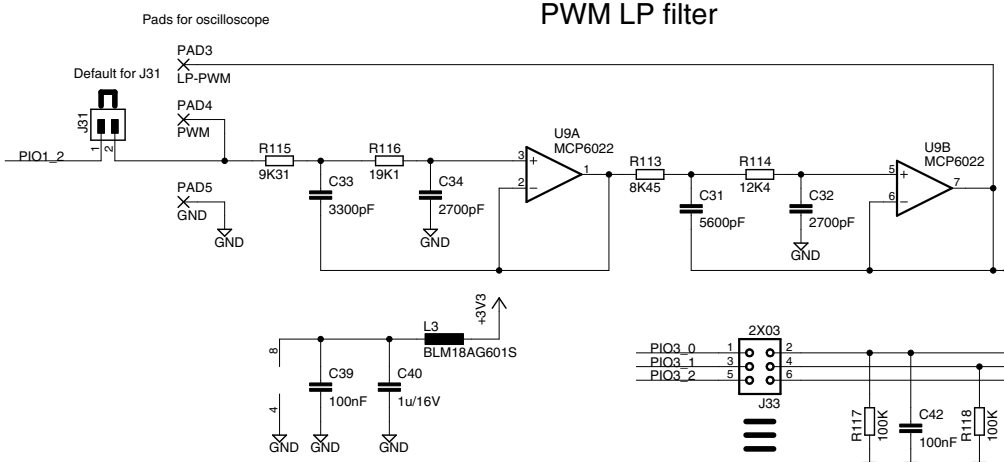

Speaker Amplifier

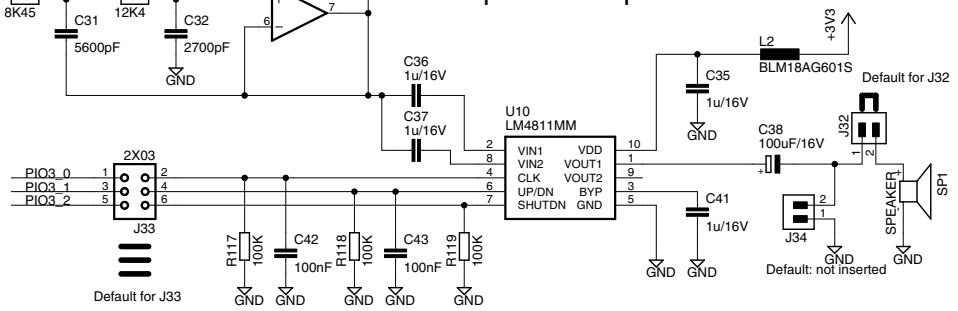

(C) Embedded Artists AB

TITLE: LPCXpresso Base Board rev B	
Document Number:	REV:
Date: 2010-09-25 23:08:22	Sheet: 7/11

I2C peripherals

PCA9532 I2C 16-bit Port Expander

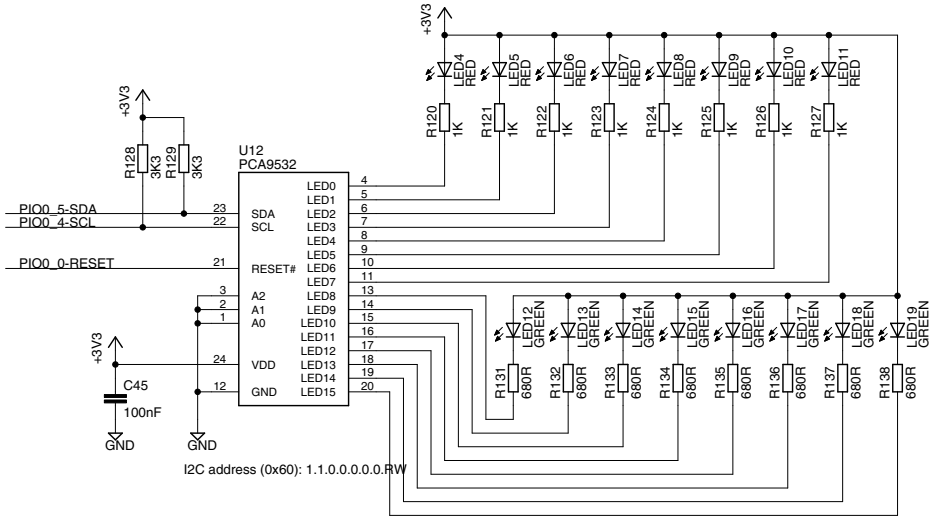

8kbit I2C-E2PROM

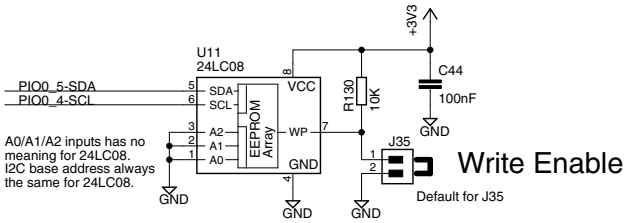

MMA7455 Accelerometer with I2C interface

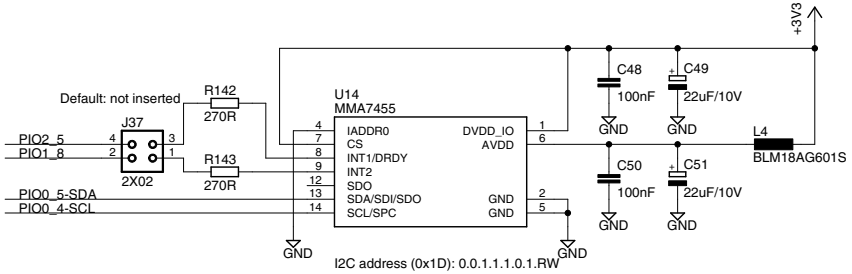

Light Sensor - ISL29003

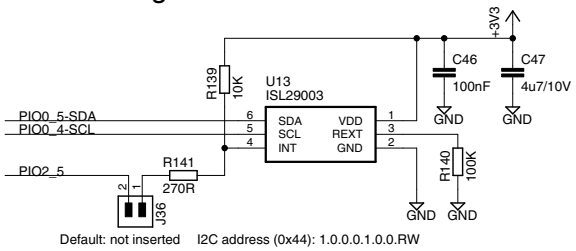

(C) Embedded Artists AB

TITLE: LPCXpresso Base Board rev B	
Document Number:	REV:
Date: 2010-09-25 23:08:22	Sheet: 8/11

SPI peripherals

MMC/SD Memory Card Interface

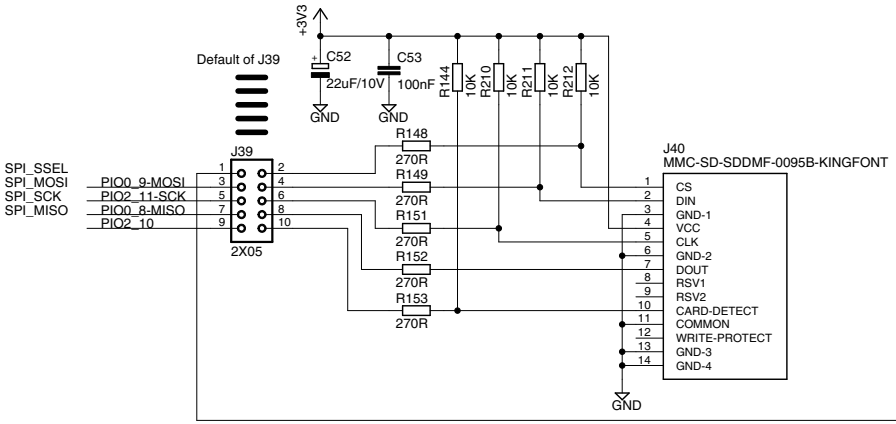

SPI-FLASH

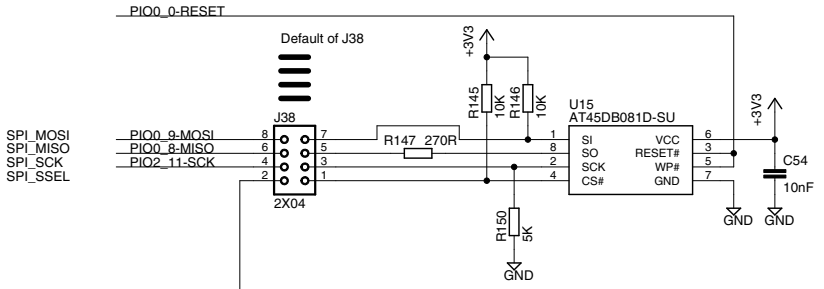

PIO1_11 used as SSEL for all three circuits.
Select one of three destinations.

Shift register to 7-segment LED

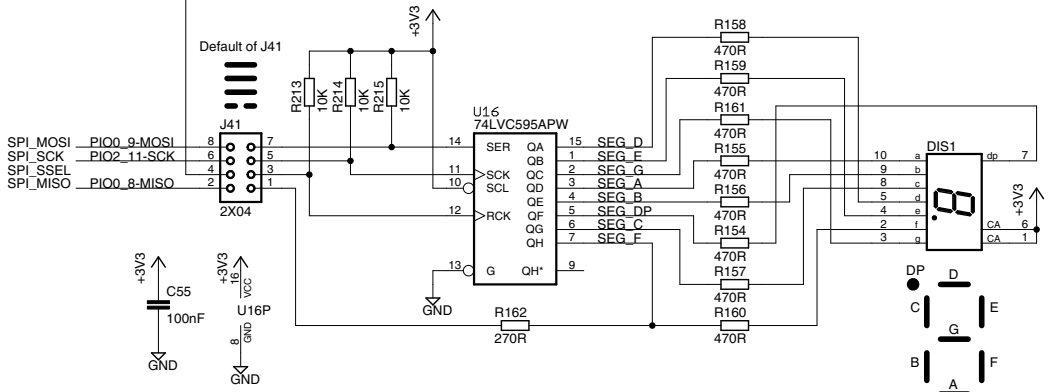

How display segments are positioned when looking at board with BNC connector facing towards you.

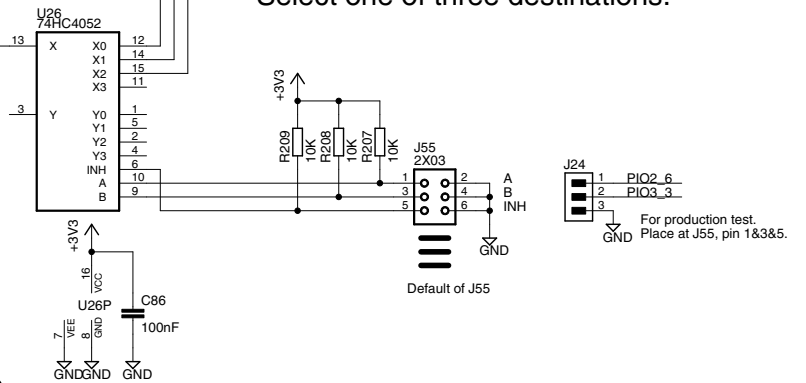

(C) Embedded Artists AB

TITLE: LPCXpresso Base Board rev B	
Document Number:	REV:
Date: 2010-09-25 23:08:22	Sheet: 9/11

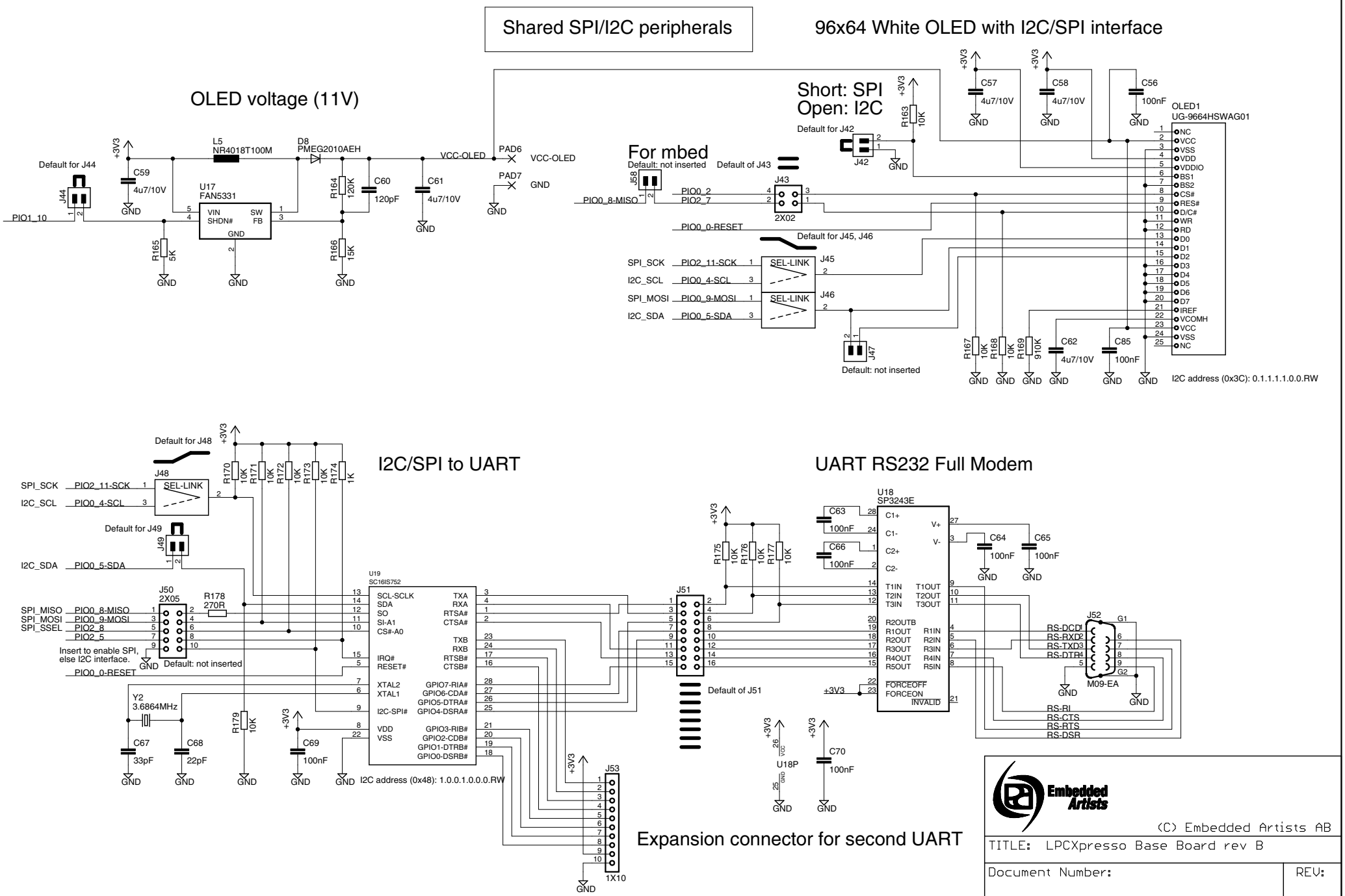
Shared SPI/I2C peripherals
96x64 White OLED with I2C/SPI interface
OLED voltage (11V)
Short: SPI
Open: I2C
For mbed
Default: not inserted
Default of J43
Default for J42
Default for J44
Default for J45, J46
Default: not inserted
OLED1
UG-9664HSWAG01
I2C address (0x3C): 0.1.1.1.1.0.0.RW
I2C/SPI to UART
UART RS232 Full Modem
Default for J48
Default for J49
Default: not inserted
Insert to enable SPI, else I2C interface.
Default of J51
I2C address (0x48): 1.0.0.1.0.0.0.RW
Expansion connector for second UART
Embedded Artists
(C) Embedded Artists AB
TITLE: LPCXpresso Base Board rev B
Document Number:
REV:
Date: 2010-09-25 23:08:22
Sheet: 10/11

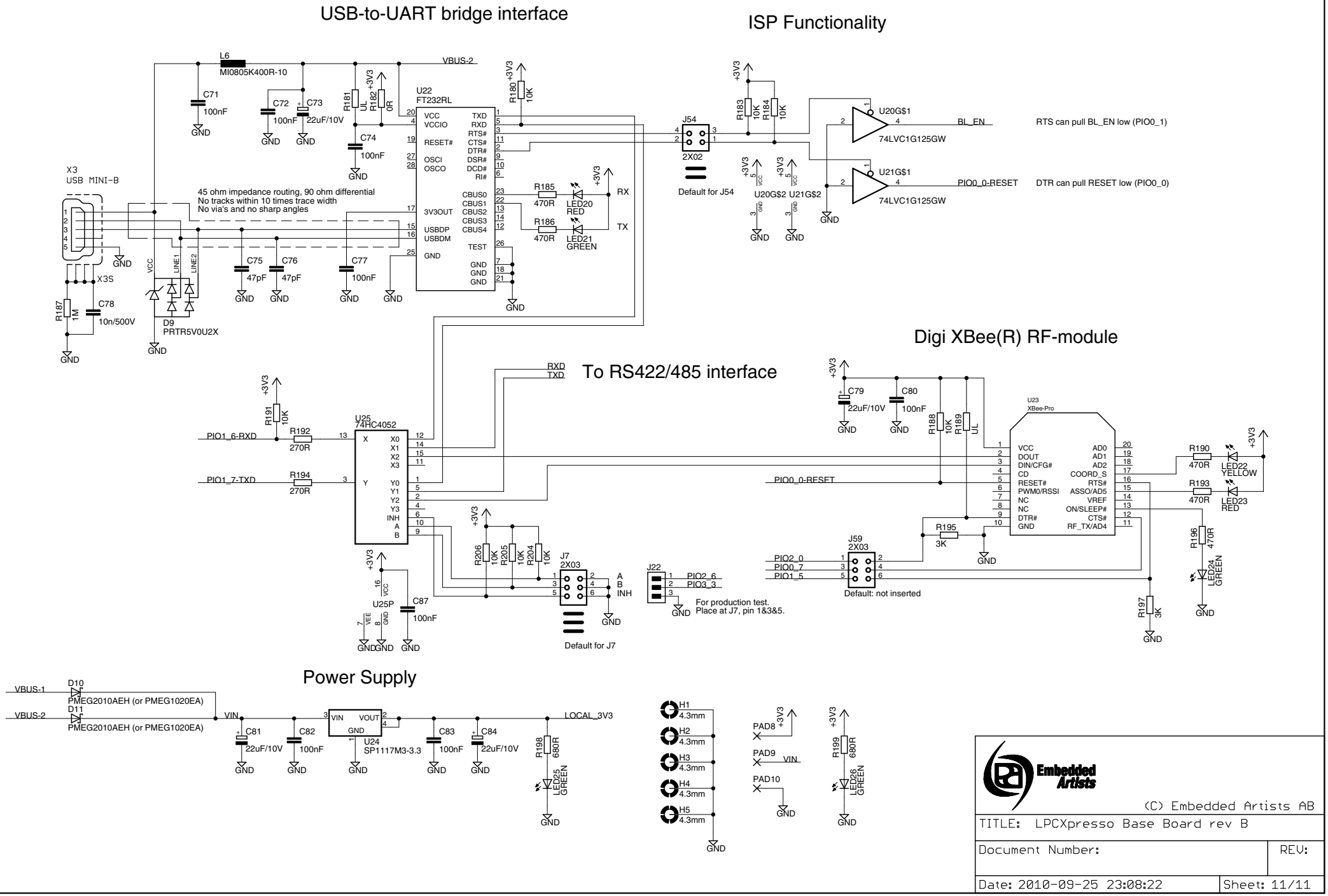
USB-to-UART bridge interface
ISP Functionality
Digi XBee(R) RF-module
To RS422/485 interface
Power Supply
L6
MI0805K400R-10
VBUS-2
U22
FT232RL
X3
USB MINI-B
45 ohm impedance routing, 90 ohm differential
No tracks within 10 times trace width
No via's and no sharp angles
D9
PRTR5V0U2X
J54
2X02
Default for J54
U20G$1
U21G$1
74LVC1G125GW
BL_EN
PIO0_0-RESET
RTS can pull BL_EN low (PIO0_1)
DTR can pull RESET low (PIO0_0)
RXD
TXD
U25
74HC4052
PIO1_6-RXD
PIO1_7-TXD
U23
XBee-Pro
J7
2X03
Default for J7
J22
PIO2_6
PIO3_3
For production test.
Place at J7, pin 1&3&5.
J59
2X03
PIO2_0
PIO0_7
PIO1_5
Default: not inserted
U24
SP1117M3-3.3
VBUS-1
VBUS-2
D10
D11
PMEG2010AEH (or PMEG1020EA)
VIN
LOCAL_3V3
H1
H2
H3
H4
H5
4.3mm
PAD8
PAD9
PAD10
(C) Embedded Artists AB
TITLE: LPCXpresso Base Board rev B
Document Number:
REV:
Date: 2010-09-25 23:08:22
Sheet: 11/11