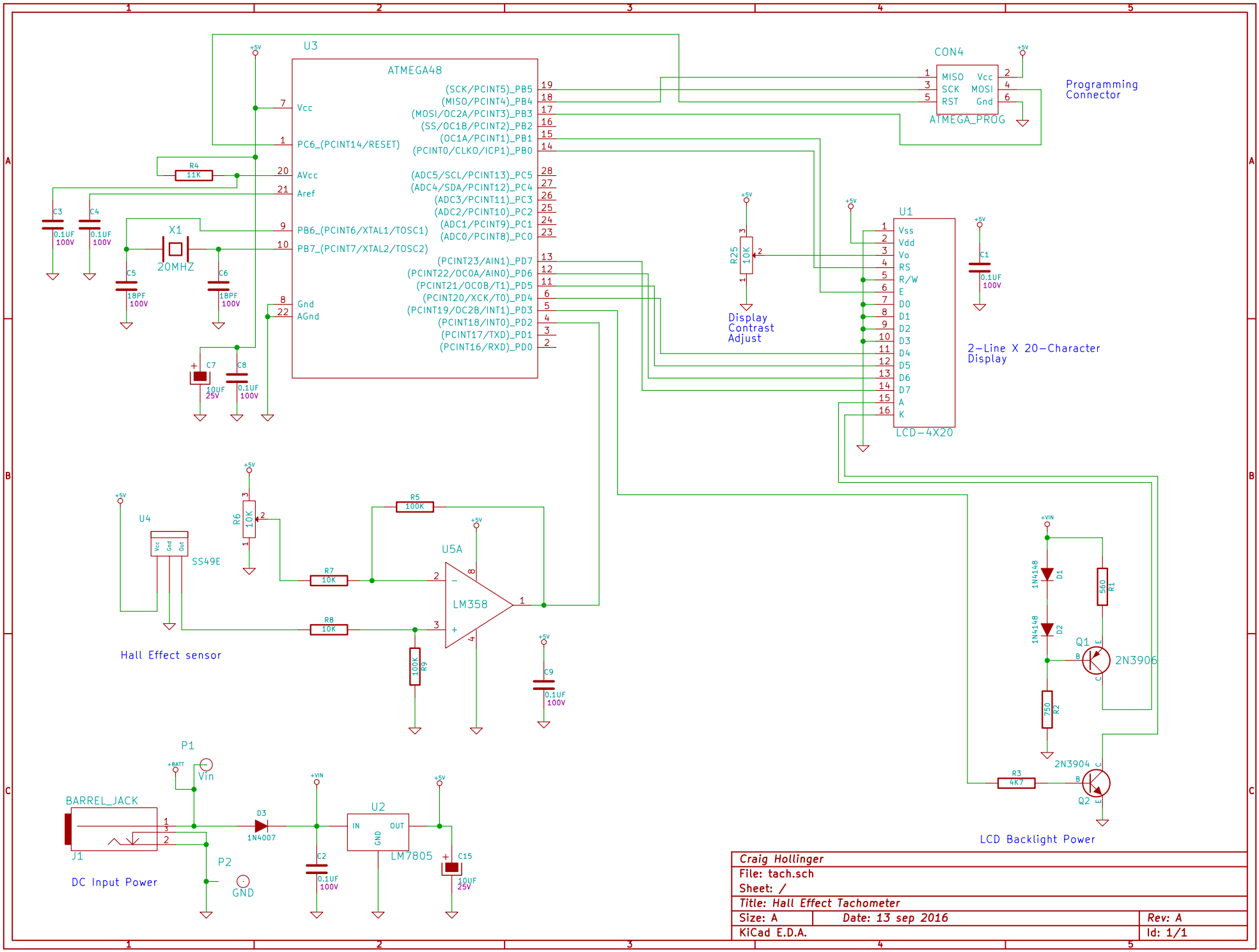

Craig Hollinger		
File: tach.sch		
Sheet: /		
Title: Hall Effect Tachometer		
Size: A	Date: 13 sep 2016	Rev: A
KiCad E.D.A.		Id: 1/1