Diagrama de Flujo del Divisor

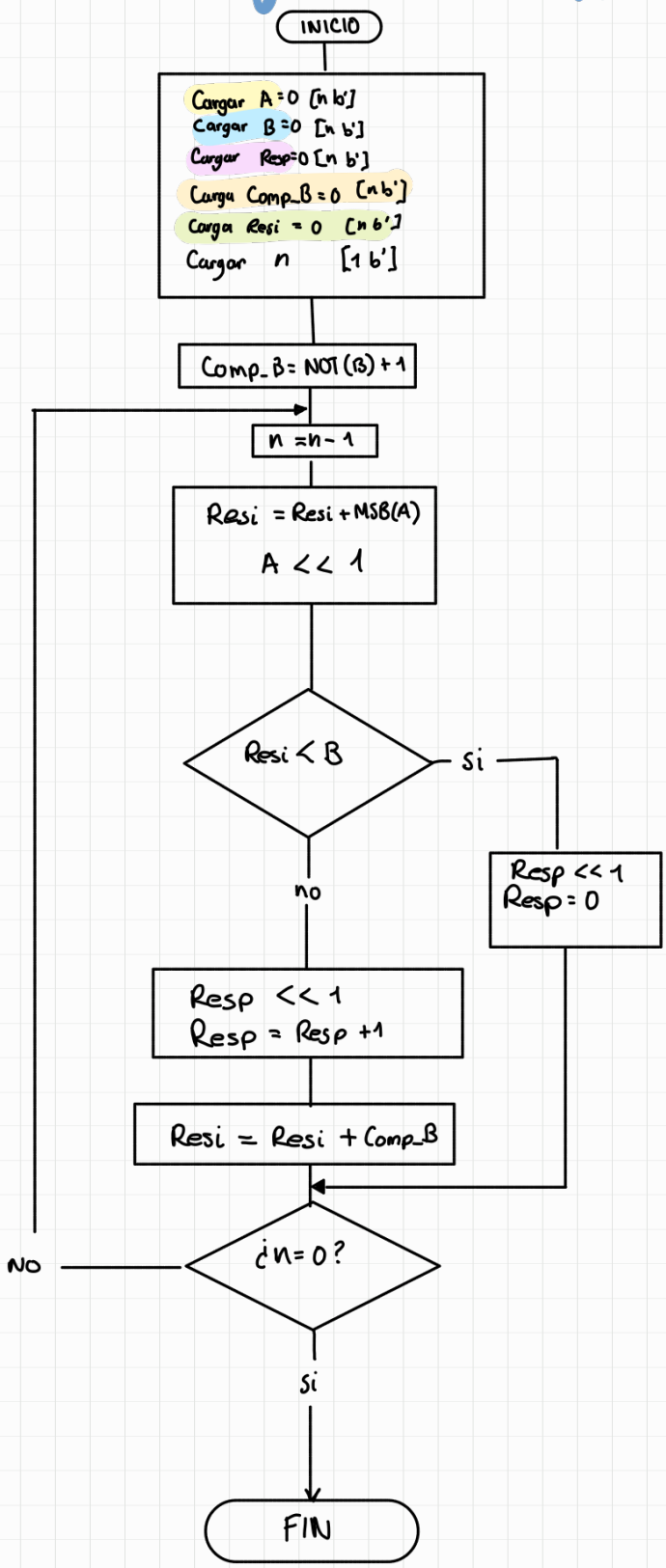

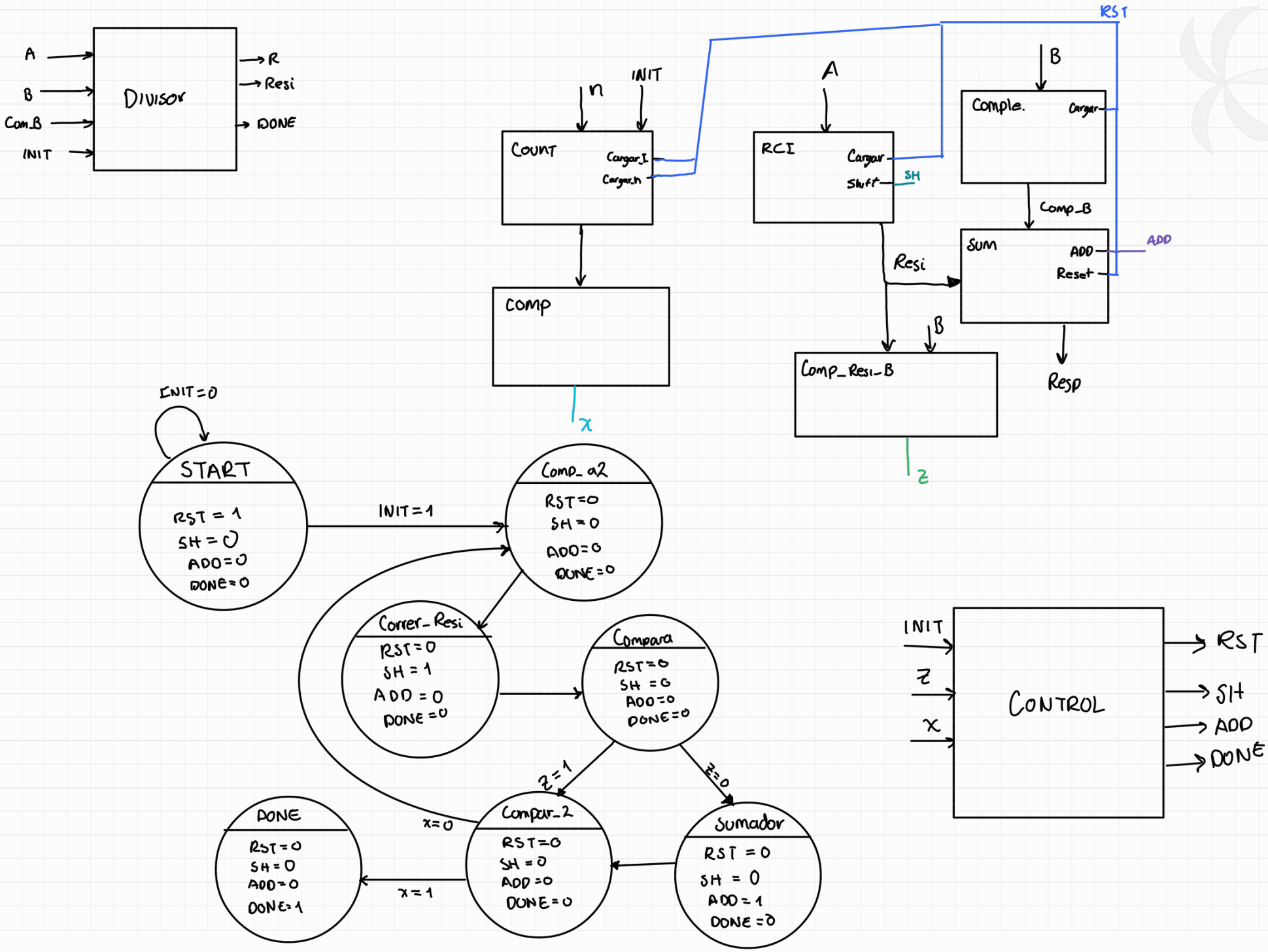
A
B
Com_B
INIT
DIVISOR
R
Resi
DONE
n
INIT
COUNT
Cargar_I
Cargar_n
COMP
x
A
RCI
Cargar
Shift
SH
RST
B
Comple.
Cargar
Comp_B
SUM
ADD
Reset
ADD
Resi
B
Comp_Resi_B
Resp
z
INIT=0
START
RST = 1
SH = 0
ADD=0
DONE=0
INIT=1
Comp_a2
RST=0
SH=0
ADD=0
DONE=0
Correr_Resi
RST=0
SH = 1
ADD = 0
DONE =0
Compara
RST=0
SH =0
ADD=0
DONE=0
z=1
z=0
Compar_2
RST=0
SH=0
ADD=0
DONE=0
Sumador
RST = 0
SH = 0
ADD=1
DONE=0
x=0
x=1
DONE
RST=0
SH=0
ADD=0
DONE=1
INIT
z
x
CONTROL
RST
SH
ADD
DONE