REVISIONS				
E.C. NO.	REV.	DESCRIPTION	BY	DATE
0176	B	ADDED DIMENSIONS	CE	10/05
0625	C	NOTES ADDED/CHANGED	SH	2/08
1084	D	NOTES ADDED	BH	8/10

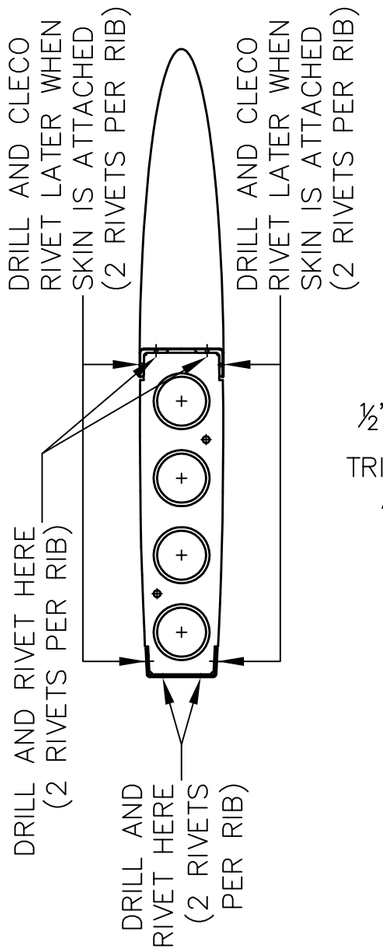

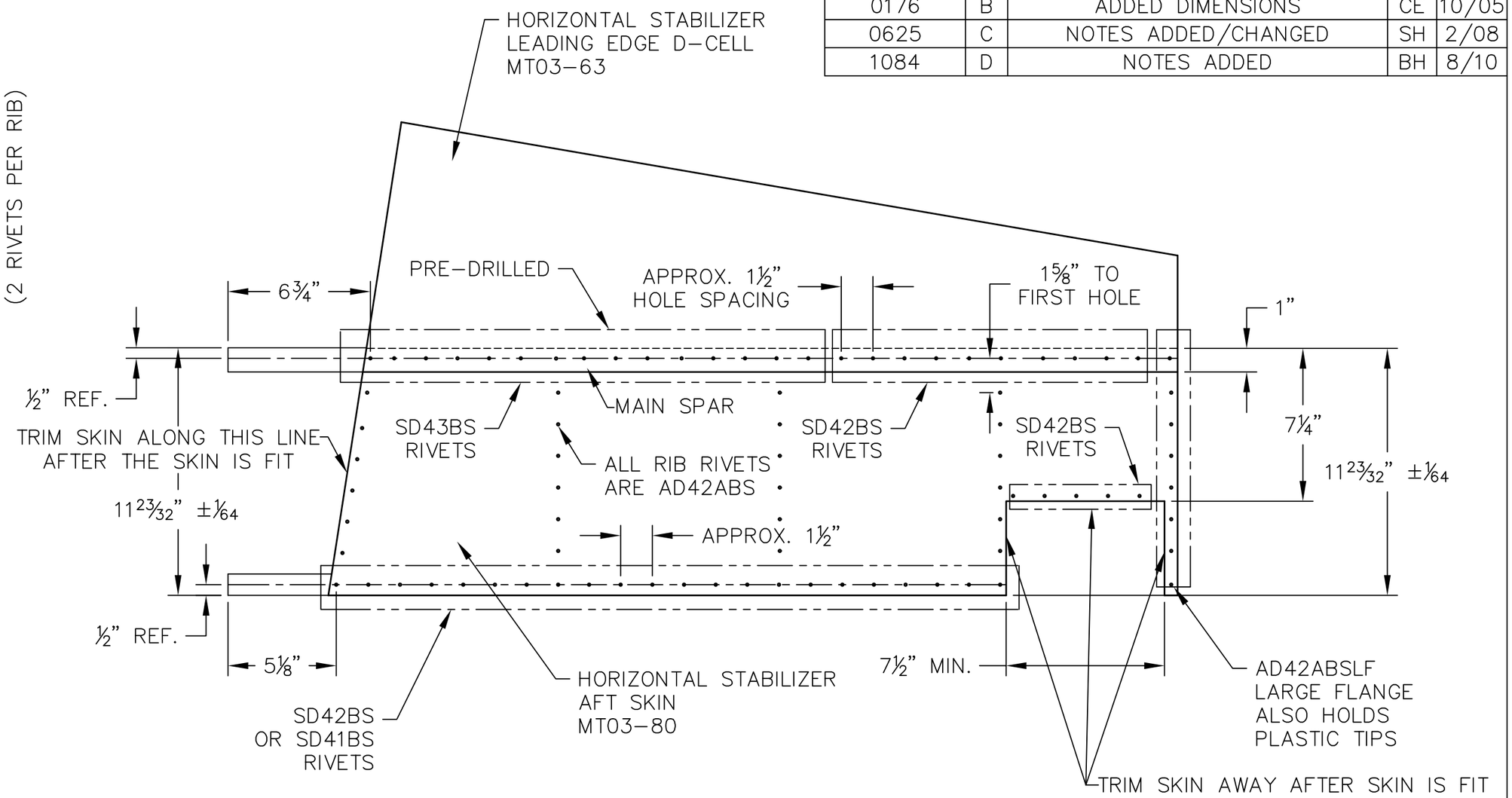

NOTES:
- IT IS RECOMMENDED TO BUILD THE HORIZONTALS ON THE FUSELAGE FRAME, THE ONLY PARTS TO BE ASSEMBLED ON A FLAT TABLE OR BENCH ARE THE MAIN AND AFT SPARS TO THE CARRYTHRUS.
- SHIMMING MAY BE REQUIRED ON THE RIBS, WHEN FITTING THE SKINS.
- SLIDE AFT SKIN 1" UNDER FORWARD SKIN.

DRAWN C. EMERY	DATE 3/10/05	TITAN AIRCRAFT SUPPLY 1419 STATE ROUTE 45 SOUTH AUSTINBURG, OHIO 44010	
CHECKED R. INGLE	DATE 8/31/10	DETAIL NAME HORIZONTAL STABILIZER SKINS	
APPROVED K. BROOKS	DATE 8/31/10	SCALE 5/16" = 1"	PART NO.
		ASSEMBLY NAME	
		PART NO.	DRAWING NO. F37
		DRAWING NO. B T51-05-INS-1141-D	

THIS DOCUMENT PROPRIETARY TO TITAN AIRCRAFT, AND IS NOT TO BE USED, CIRCULATED, REPRODUCED, COPIED, OR DISCLOSED IN ANY MANNER WITHOUT PRIOR WRITTEN PERMISSION OF AN AUTHORIZED OFFICIAL OF TITAN AIRCRAFT.