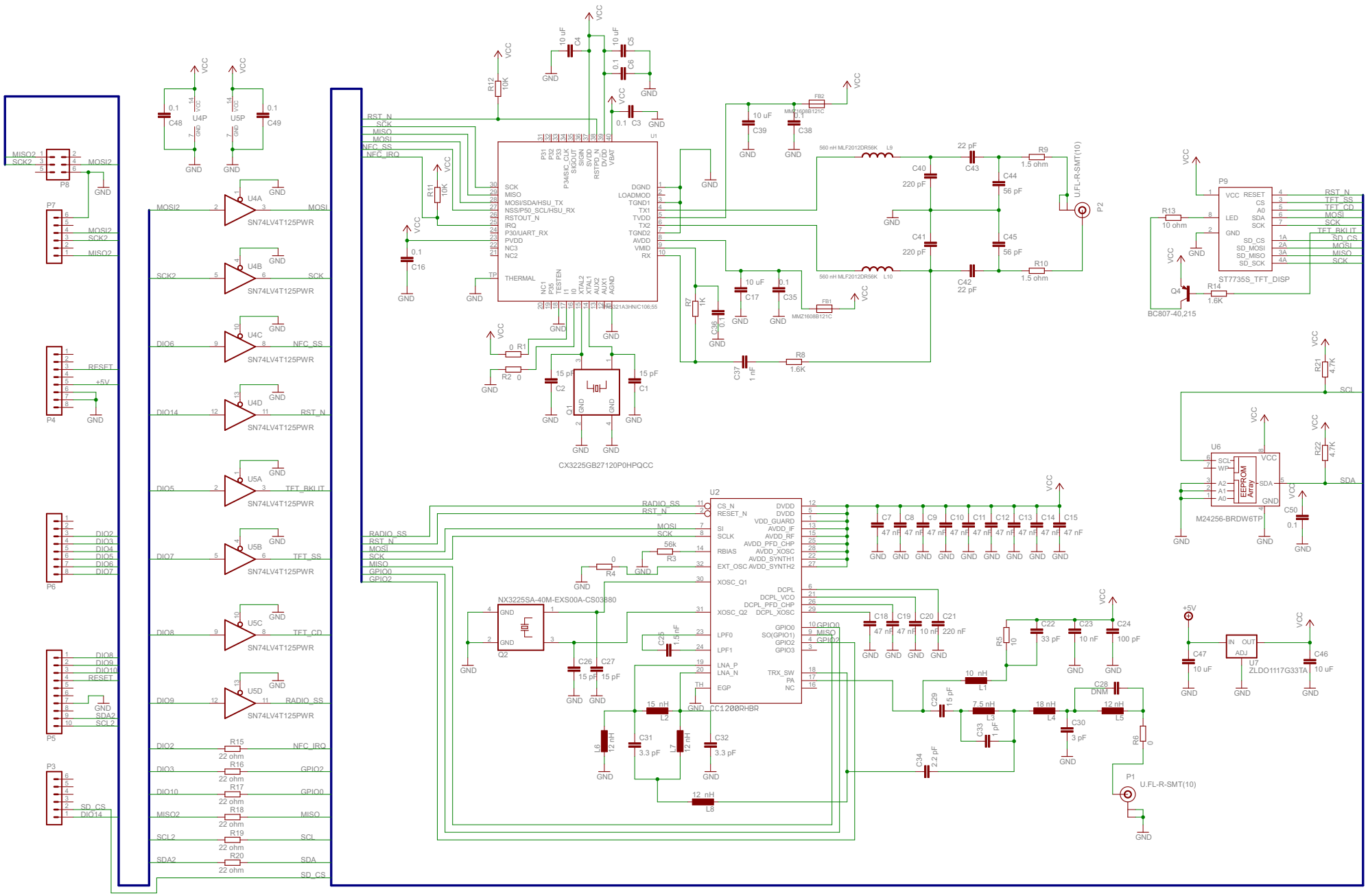
U1
CC1200RHBR
U2
CX3225GB27120P0HPQCC
Q1
NX3225SA-40M-EXS00A-CS03880
Q2
U4A
U4B
U4C
U4D
U5A
U5B
U5C
U5D
U4P
U5P
SN74LV4T125PWR
P8
P7
P4
P6
P5
P3
P9
ST7735S_TFT_DISP
U6
M24256-BRDW6TP
U7
ZLDO1117G33TA
P1
P2
U.FL-R-SMT(10)
BC807-40,215
Q4
RST_N
SCK
MISO
MOSI
NFC_IRQ
RADIO_SS
GPIO0
GPIO2
SCL
SDA
SD_CS
TFT_BKLIT
TFT_SS
TFT_CD
NFC_SS
VCC
GND