SIZE	A4	DRN NAME	**********	DRN NO.	********

批准
2011.06.23
研發部

NOTE:
1.請清除加工所造成毛邊
2.未標註尺寸公差請參照圖面公差表

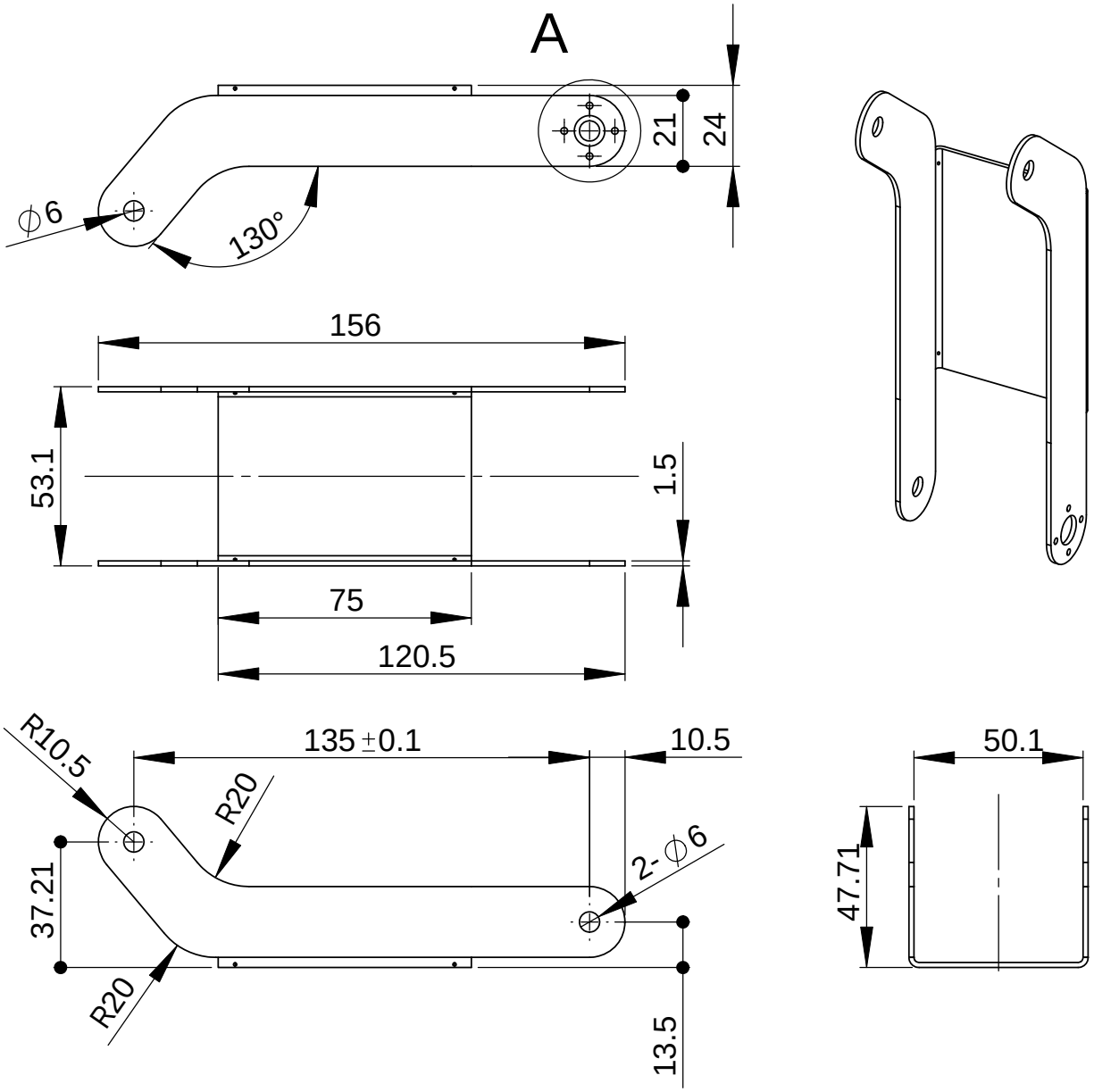

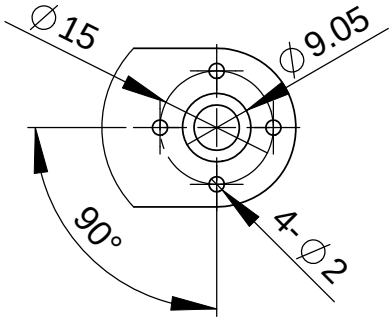

細部放大圖 A
比例 1 : 1

RANGE					
TOL±	0~30	30~80	80~180	180~315	315~800
Cen. Dist.(Metal)	0.05	0.10	0.15	0.20	0.25

△				
	DATE	APPD BY	DSN BY	ENGINERING HANGE DESCRIPTION
BASIC RANGE		DRN BY		MATERIAL AL 6061/7075
.X	.XX	DSN BY	Jerry	2011/06/14 FIGURE PROPERTY
*****	*****	CKD BY	Derek	2011/06/20 **********
ANGULAR` DEG		APPD BY		

DM&P ELECTRONICS INC.

THESE DRAWINGS AND SPECIFICATIONS ARE THE PROPERTY OF DM&P ELECTRONICS INC. AND SHALL NOT BE REPRODUCED OR USED AS THE BASIS FOR THE MANUFACTURE OR SELL OF APPARATUSES OR DEVICES WITHOUT PERMISSION.

PART NAME	**********	PART NO.	01_MIR1
UNIT: MM	USED NO	**********	SCALE: 1:2(1:1)

REV. D1.0

PAGE: 1 OF 1