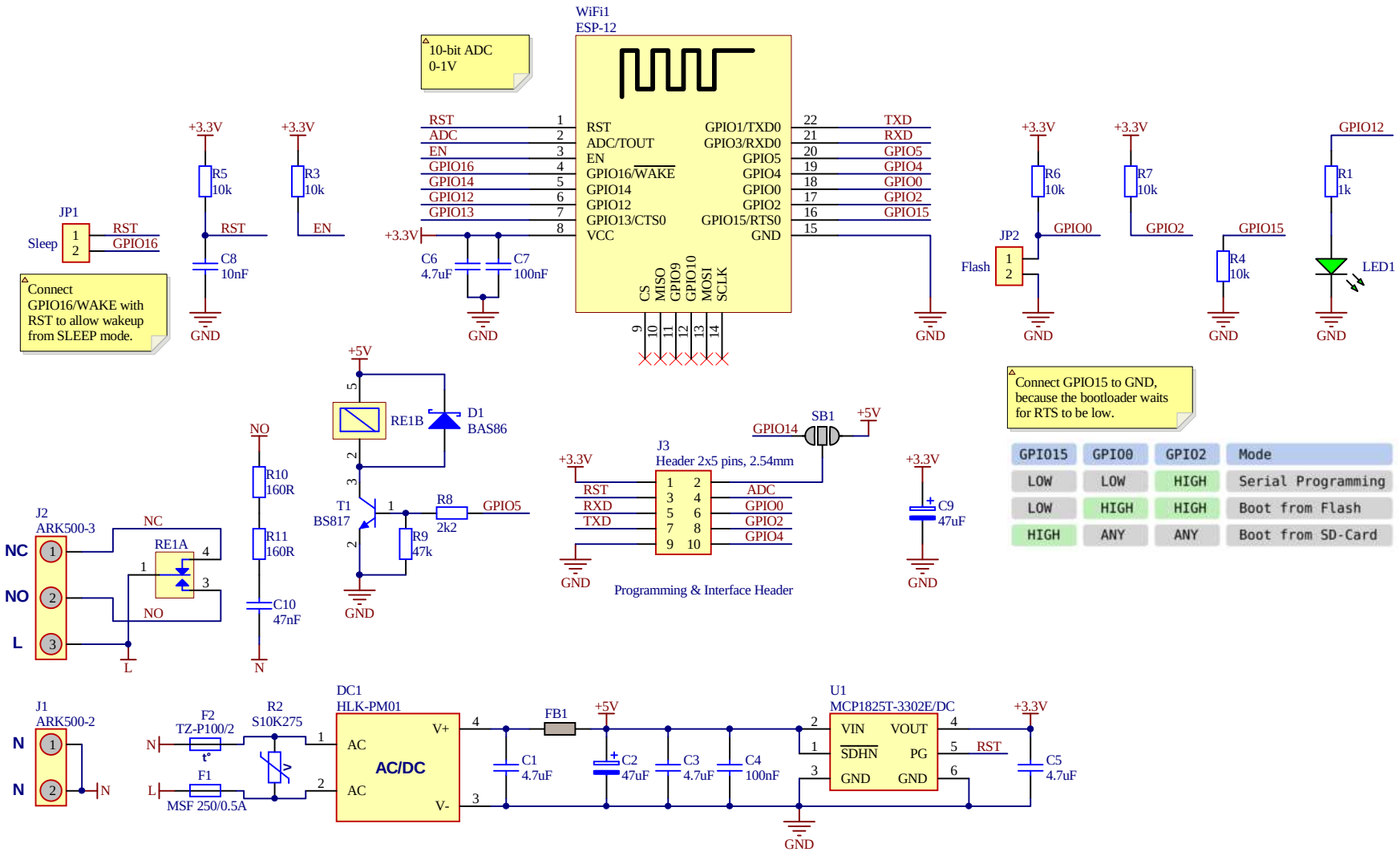

GPIO15	GPIO0	GPIO2	Mode
LOW	LOW	HIGH	Serial Programming
LOW	HIGH	HIGH	Boot from Flash
HIGH	ANY	ANY	Boot from SD-Card

	Project: WiFi Switch		
	Title: WiFi Switch - Main Board		
Draw by: Miroslav Batek	Size: A4	File: WiFi Switch.v2.SchDoc	
Check by: *	Date: 8.11.2017	Revision: 2	Sheet: 1 of 1