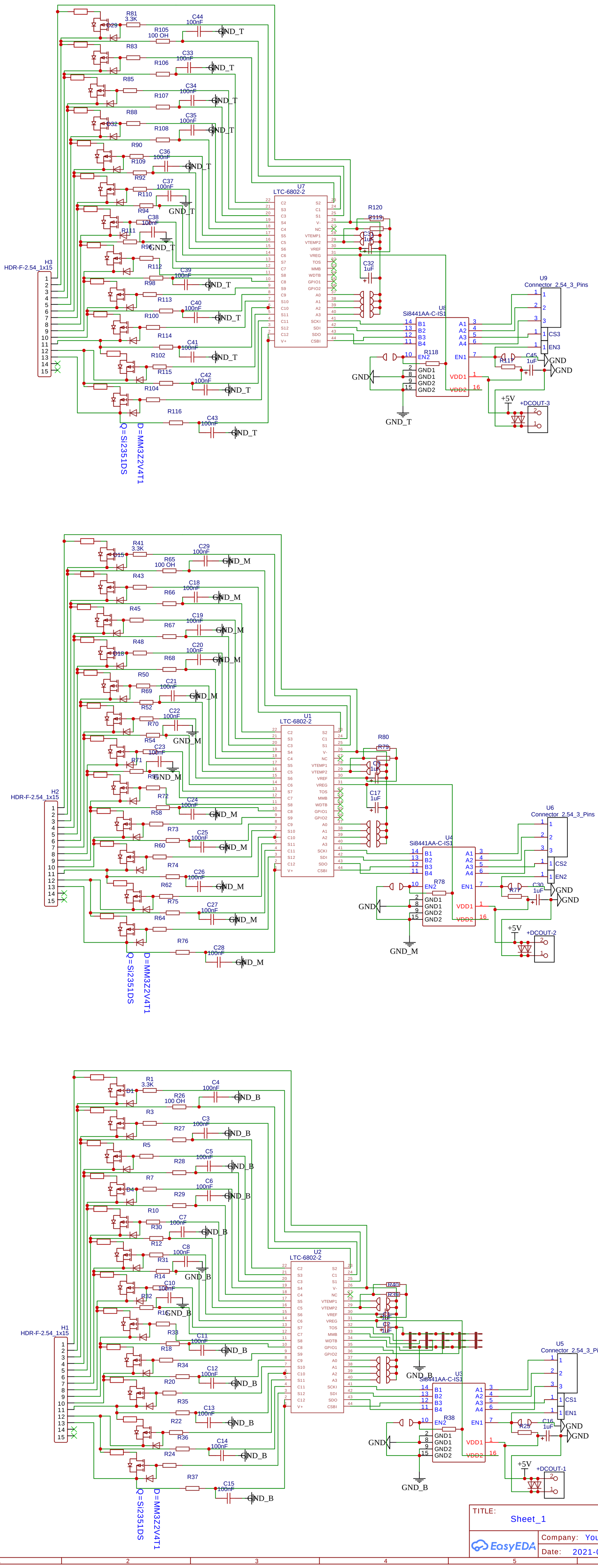

TITLE: Sheet_1	REV: 1.0
EasyEDA	Company: Your Company
	Sheet: 1/1
	Date: 2021-07-26 Drawn By: alicangok