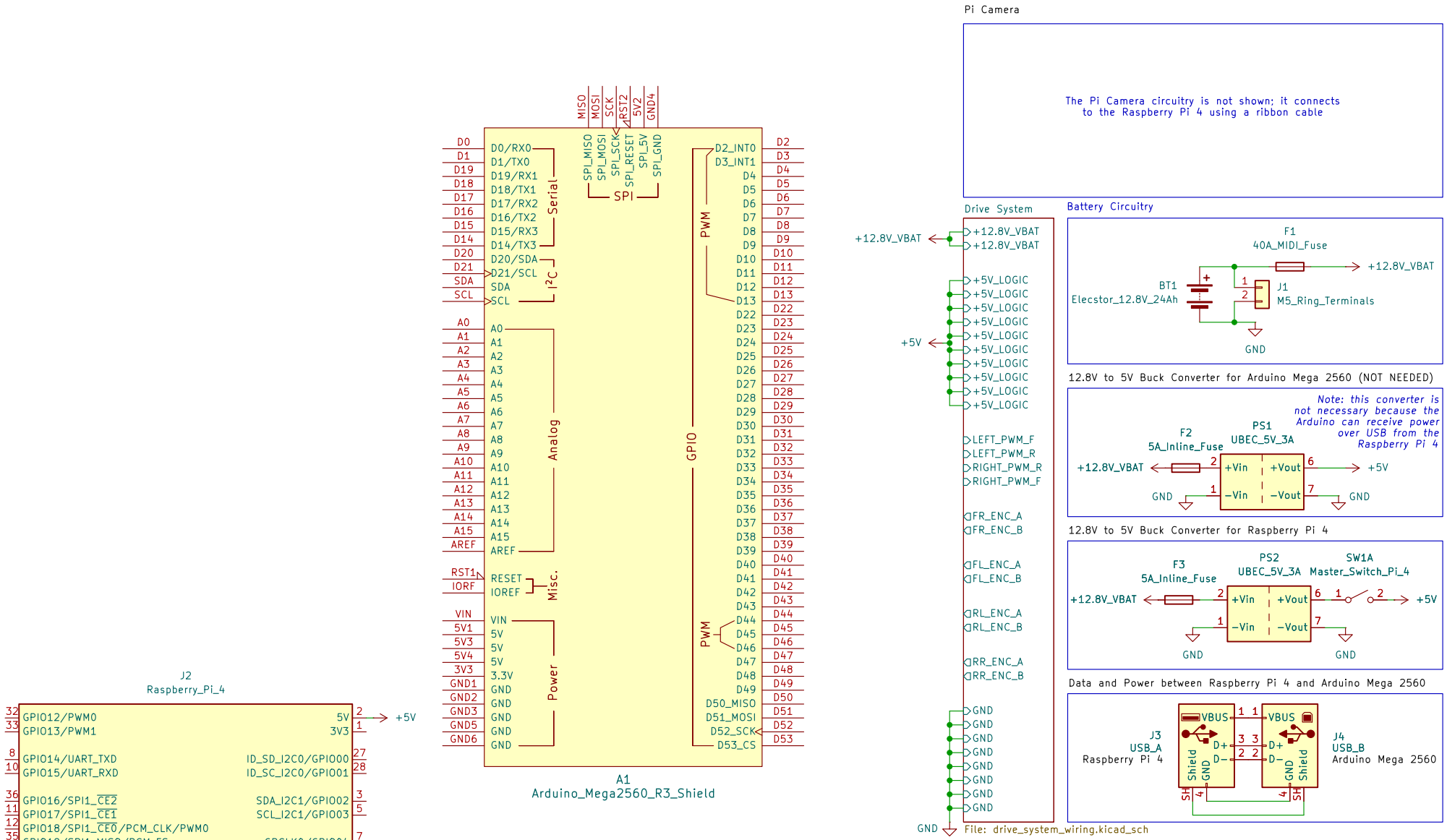

Achal Gupta
UCT Space and Astronomy Society

Sheet: /
File: Master Wiring Schematic.kicad_sch

Title: Cars4Mars Master Schematic

Size: A4	Date: 2026-07-01	**Rev: 1.0**
KiCad E.D.A. 10.0.0		Id: 1/2

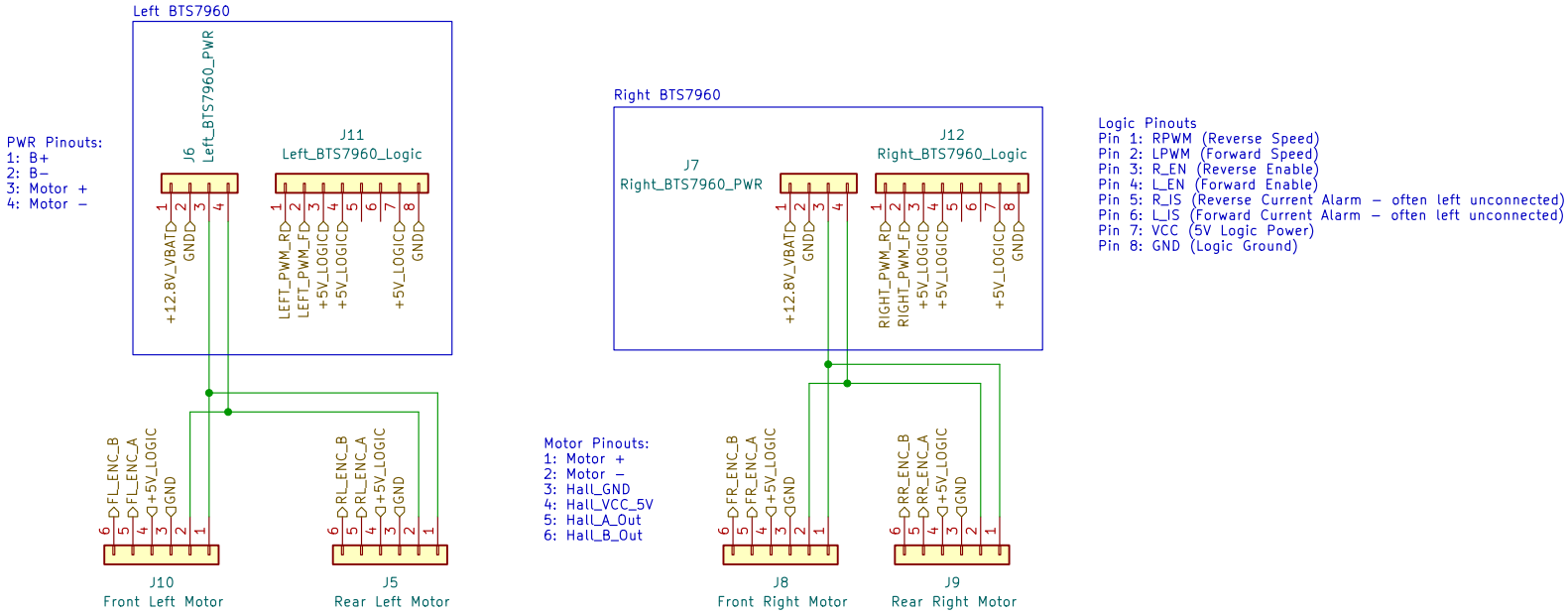

Achal Gupta
UCT Space and Astronomy Society

Sheet: /Drive System/
File: drive_system_wiring.kicad_sch

Title: Cars4Mars Master Schematic

Size: A4	Date: 2026-07-01	**Rev: 1.0**
KiCad E.D.A. 10.0.0		Id: 2/2