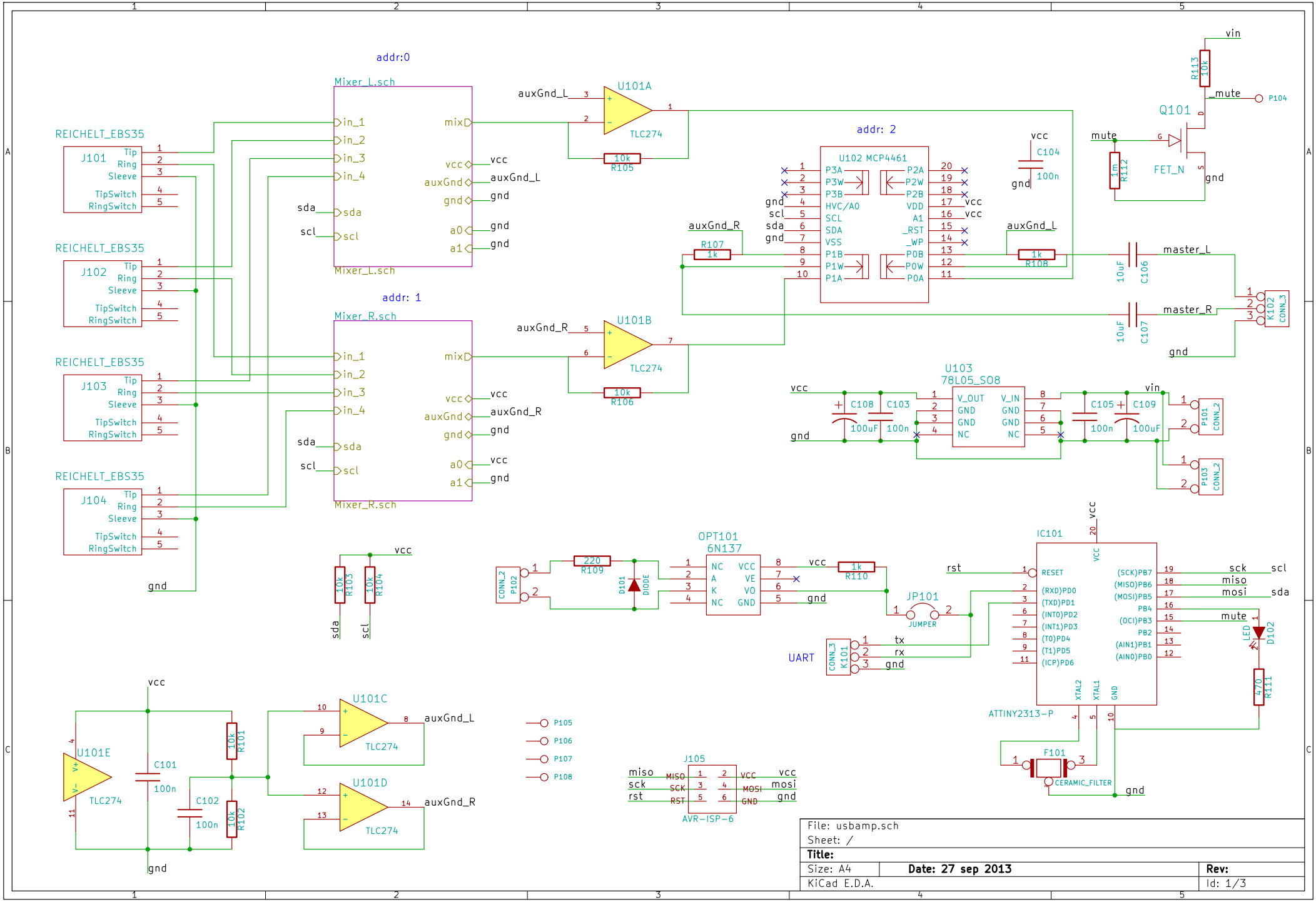
addr:0
Mixer_L.sch
in_1
in_2
in_3
in_4
sda
scl
mix
vcc
auxGnd
gnd
a0
a1
addr: 1
Mixer_R.sch
REICHELT_EBS35
J101
J102
J103
J104
Tip
Ring
Sleeve
TipSwitch
RingSwitch
U101A
U101B
TLC274
10k
R105
R106
auxGnd_L
auxGnd_R
addr: 2
U102 MCP4461
P3A
P3W
P3B
HVC/A0
SCL
SDA
VSS
P1B
P1W
P1A
P2A
P2W
P2B
VDD
A1
_RST
_WP
P0B
P0W
P0A
R107
1k
R108
C104
100n
Q101
FET_N
R113
10k
R112
1m
_mute
P104
vin
master_L
master_R
C106
C107
10uF
K102
CONN_3
U103
78L05_SO8
V_OUT
V_IN
C108
C103
C105
C109
100uF
P101
P103
CONN_2
R103
R104
OPT101
6N137
NC
A
K
VCC
VE
VO
GND
R109
220
D101
DIODE
R110
JP101
JUMPER
UART
K101
tx
rx
IC101
ATTINY2313-P
RESET
(RXD)PD0
(TXD)PD1
(INT0)PD2
(INT1)PD3
(T0)PD4
(T1)PD5
(ICP)PD6
(SCK)PB7
(MISO)PB6
(MOSI)PB5
PB4
(OCI)PB3
PB2
(AIN1)PB1
(AIN0)PB0
XTAL2
XTAL1
LED
D102
R111
470
F101
CERAMIC_FILTER
U101E
C101
C102
R101
R102
U101C
U101D
P105
P106
P107
P108
J105
AVR-ISP-6
MISO
SCK
RST
mosi
sck
miso
mute
File: usbamp.sch
Sheet: /
Title:
Size: A4
Date: 27 sep 2013
Rev:
KiCad E.D.A.
Id: 1/3