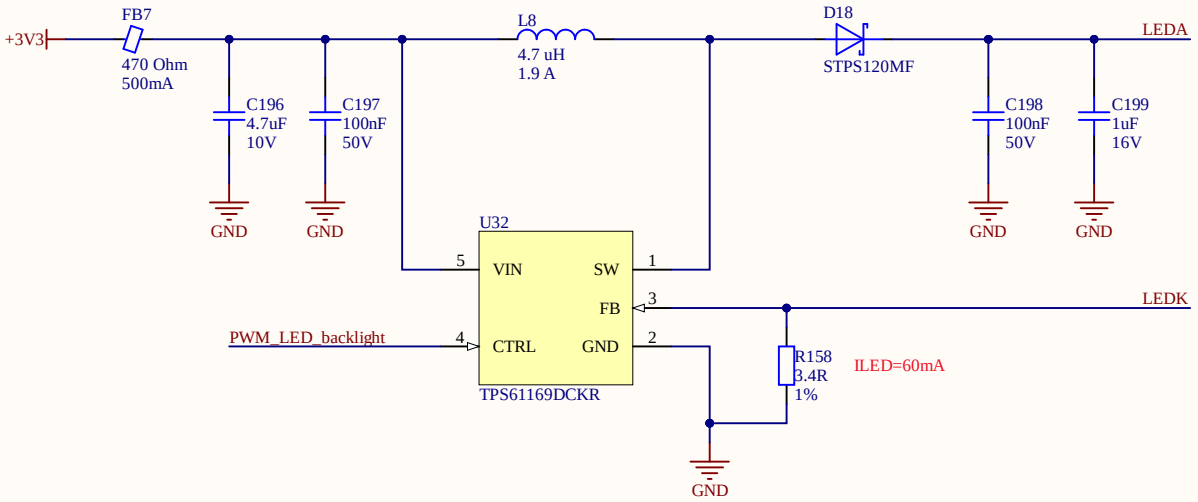

Title **User Interface**			*Acme_CPU* *30 N Gould St suite 4000* *Sheridan WY 82801*
Size: A4	Number: 14	Revision: 0.1	
Date: 12.03.2022 Time: 2:00:41		Sheet 14 of 51	
File: 16. Power Disp.SchDoc			

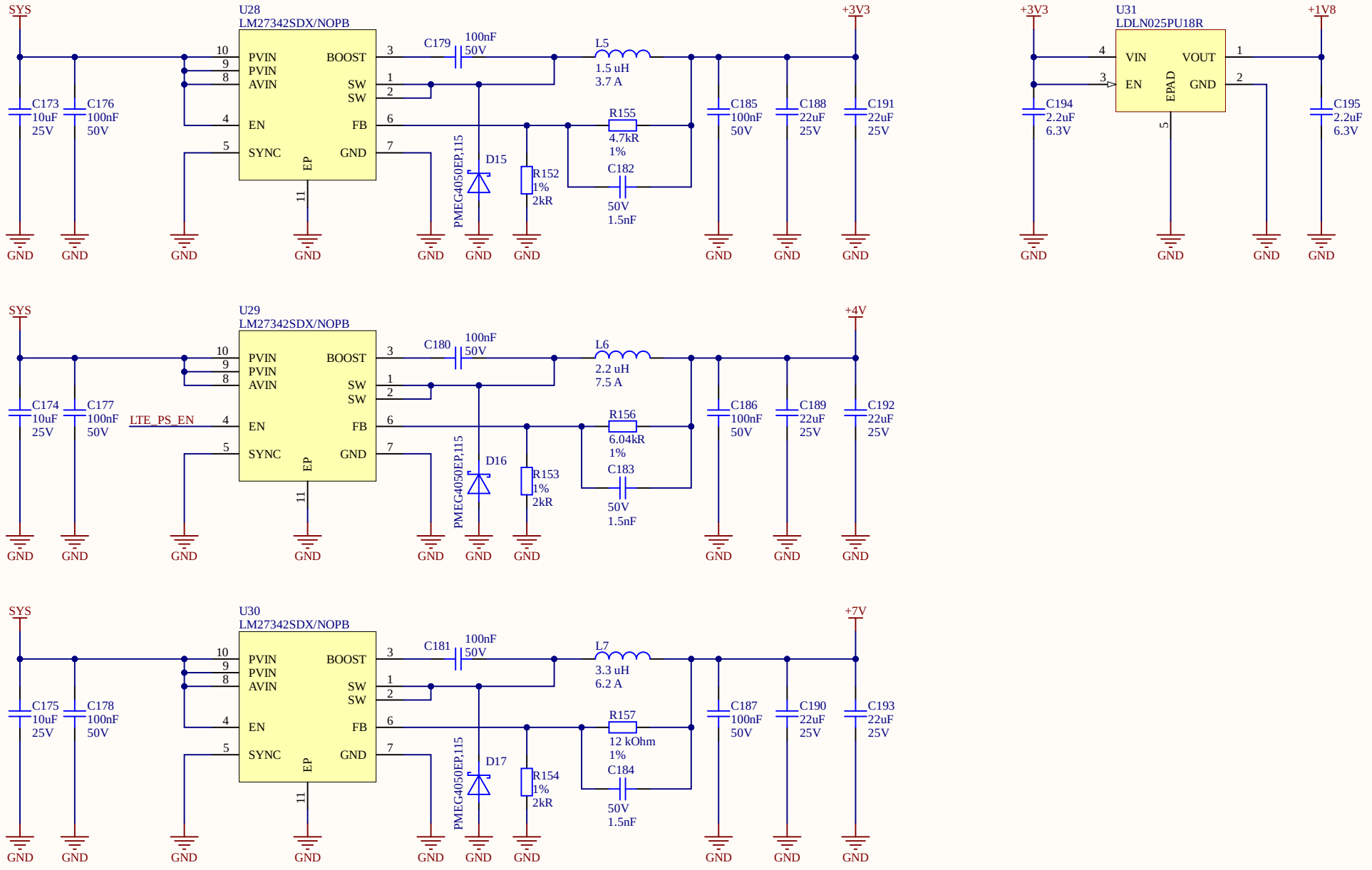

Title	**User Interface**		*Acme_CPU* *30 N Gould St suite 4000* *Sheridan WY 82801*
Size: A4	Number: 14	Revision: 0.1	
Date: 12.03.2022	Time: 2:00:42	Sheet 14 of 51	
File: 15. Power.SchDoc			

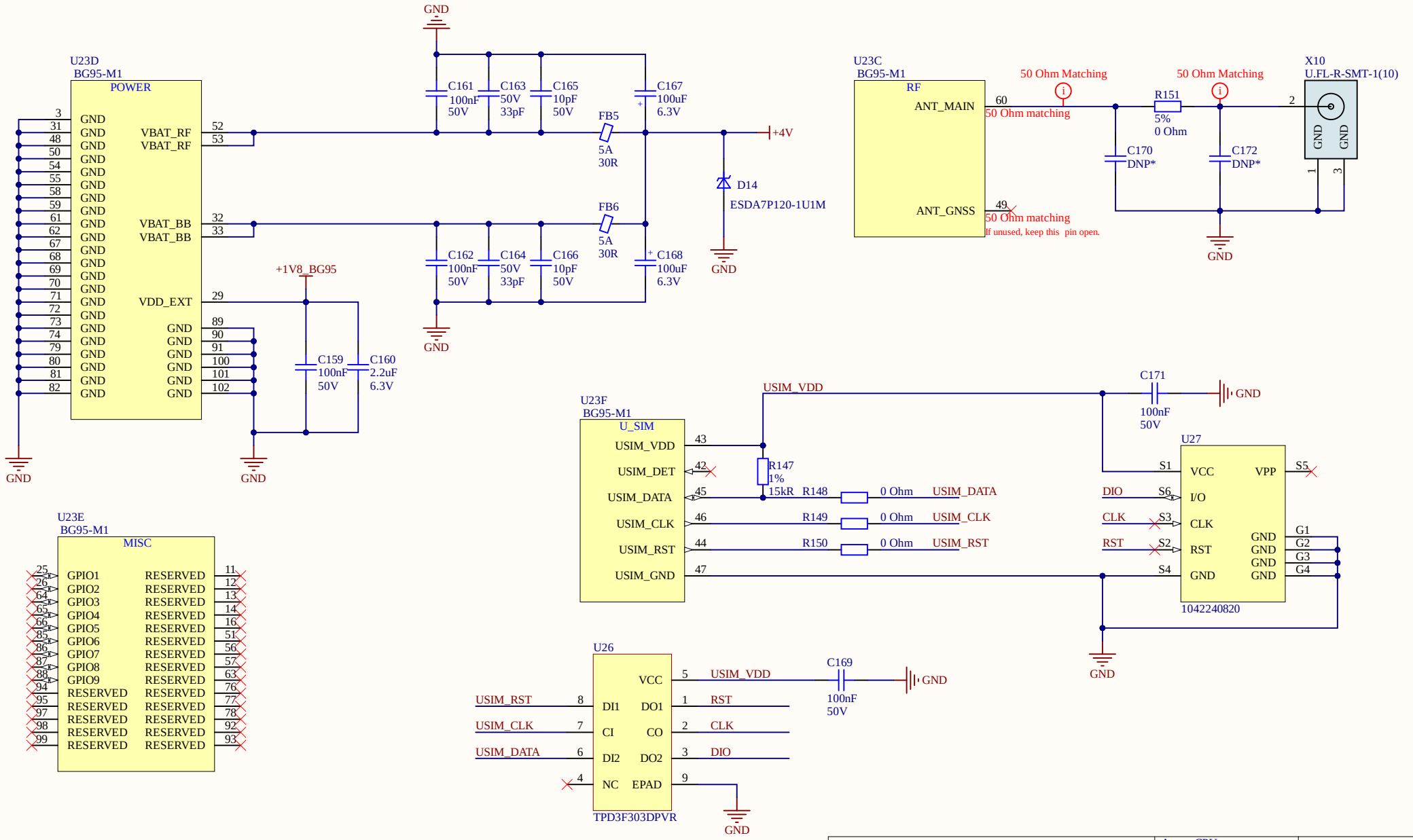

Title	**User Interface**		*Acme_CPU* *30 N Gould St suite 4000* *Sheridan WY 82801*
Size: A4	Number: 14	Revision: 0.1	
Date: 12.03.2022	Time: 2:00:42	Sheet 14 of 51	
File: 14. LTE Periph.SchDoc			

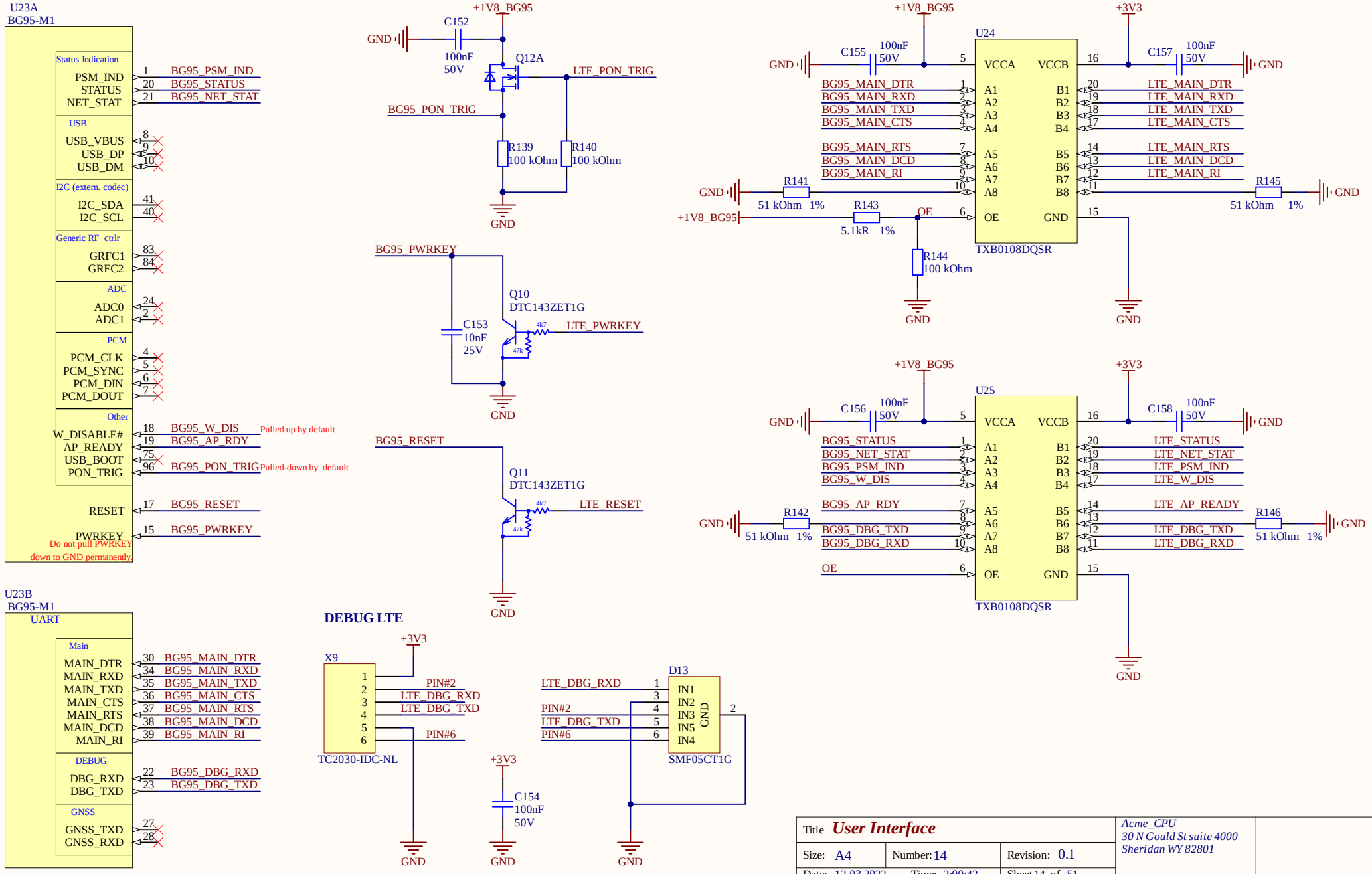

Title **User Interface**			*Acme_CPU* *30 N Gould St suite 4000* *Sheridan WY 82801*
Size: A4	Number: 14	Revision: 0.1	
Date: 12.03.2022	Time: 2:00:42	Sheet 14 of 51	
File: 13. LTE.SchDoc			

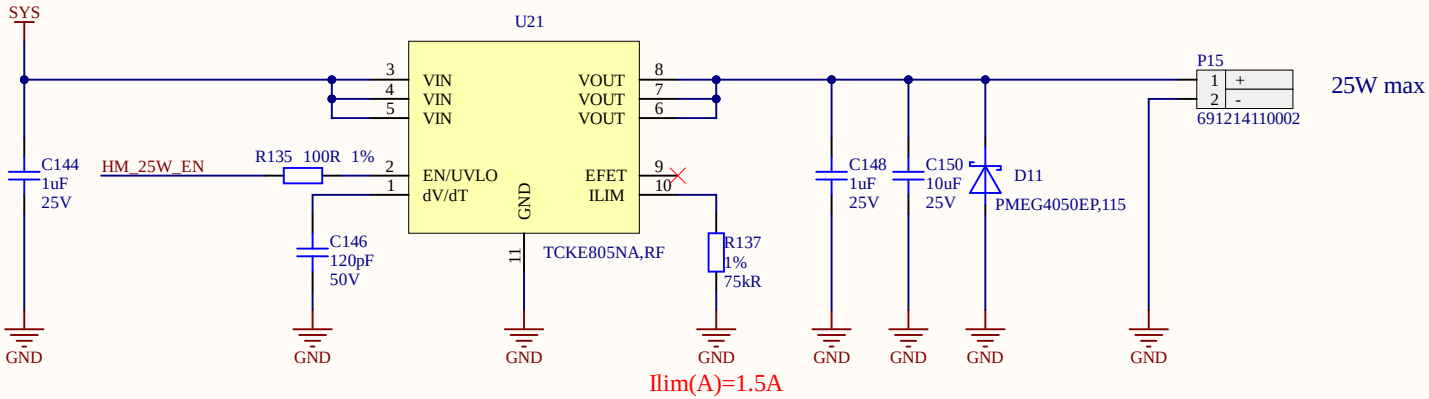

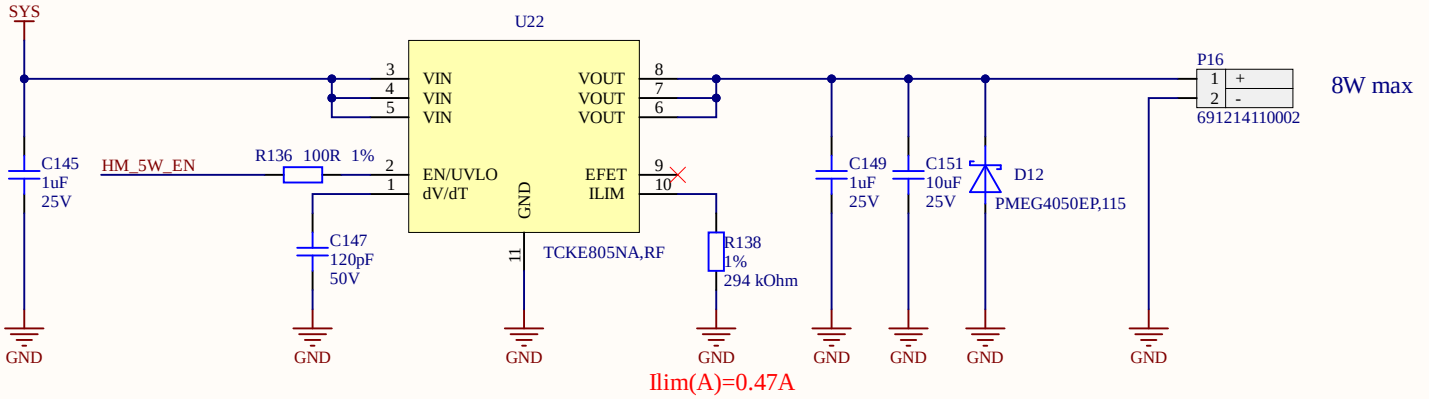

Title **User Interface**			*Acme_CPU* *30 N Gould St suite 4000* *Sheridan WY 82801*
Size: A4	Number: 14	Revision: 0.1	
Date: 12.03.2022	Time: 2:00:42	Sheet 14 of 51	
File: 12. Heating modules.SchDoc			

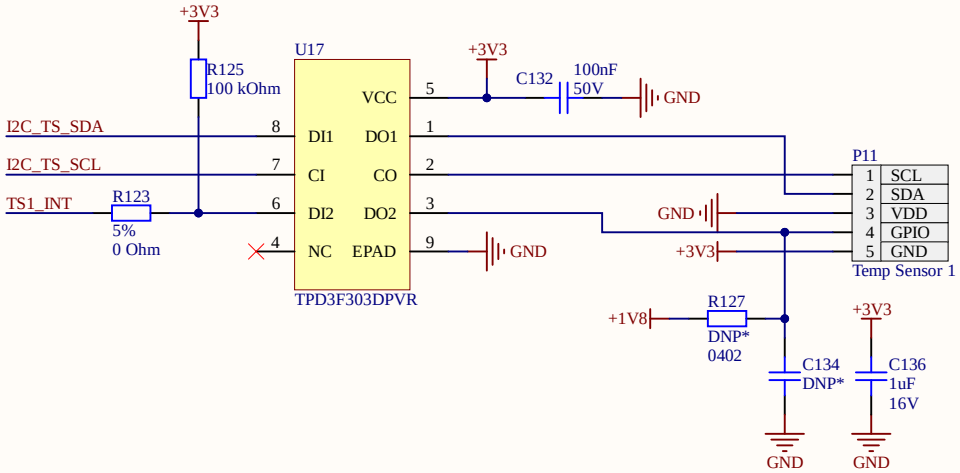

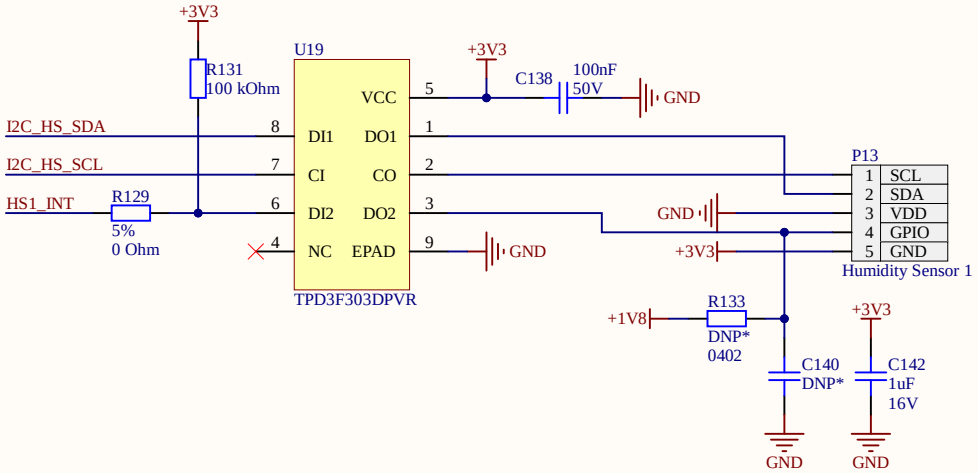

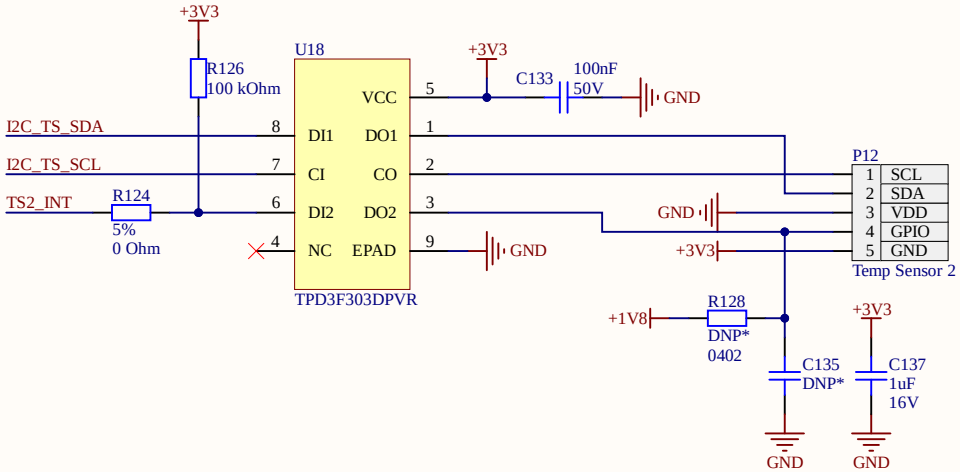

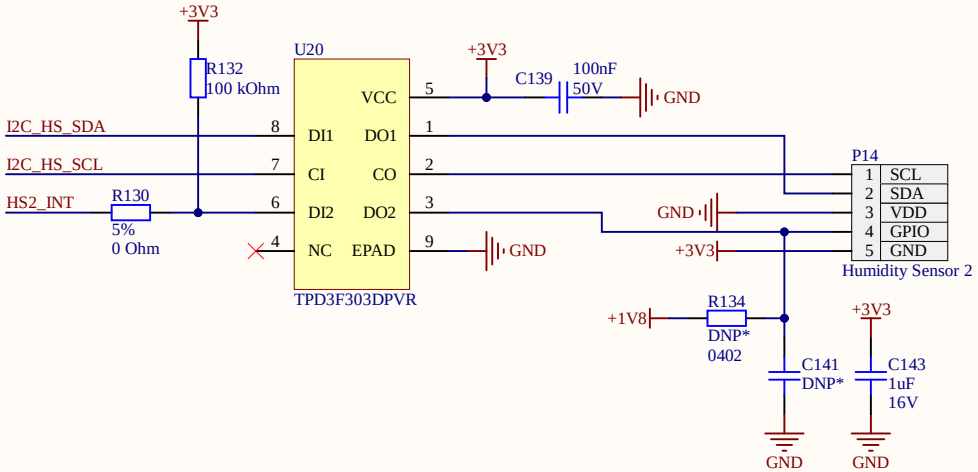

Title	**User Interface**		*Acme_CPU* *30 N Gould St suite 4000* *Sheridan WY 82801*
Size: A4	Number: 14	Revision: 0.1	
Date: 12.03.2022	Time: 2:00:42	Sheet 14 of 51	
File: 11. Sensors.SchDoc			

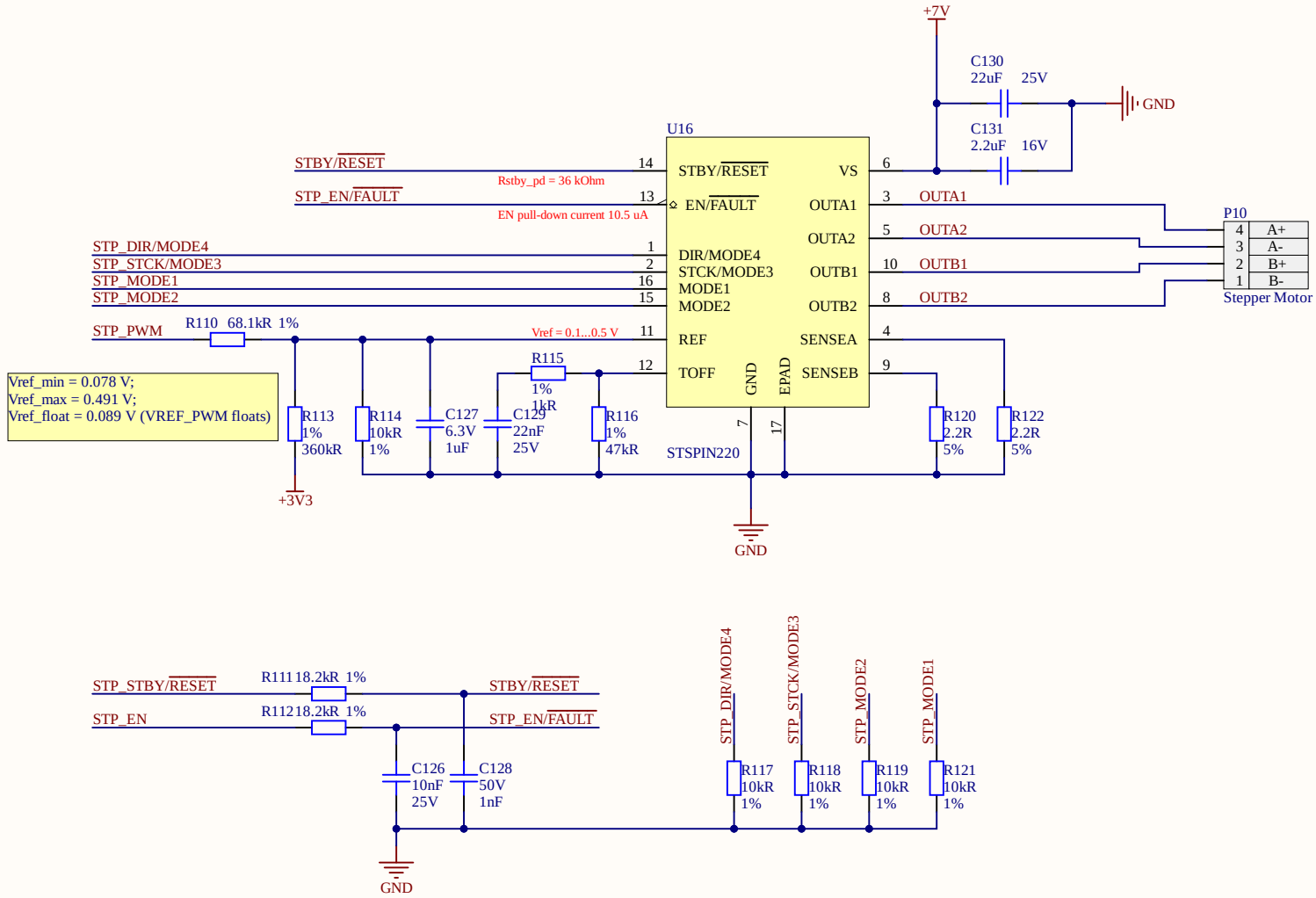

Title	**User Interface**		*Acme_CPU* *30 N Gould St suite 4000* *Sheridan WY 82801*
Size: A4	Number: 14	Revision: 0.1	
Date: 12.03.2022	Time: 2:00:43	Sheet 14 of 51	
File: 10. Stepper Motor Driver.SchDoc			

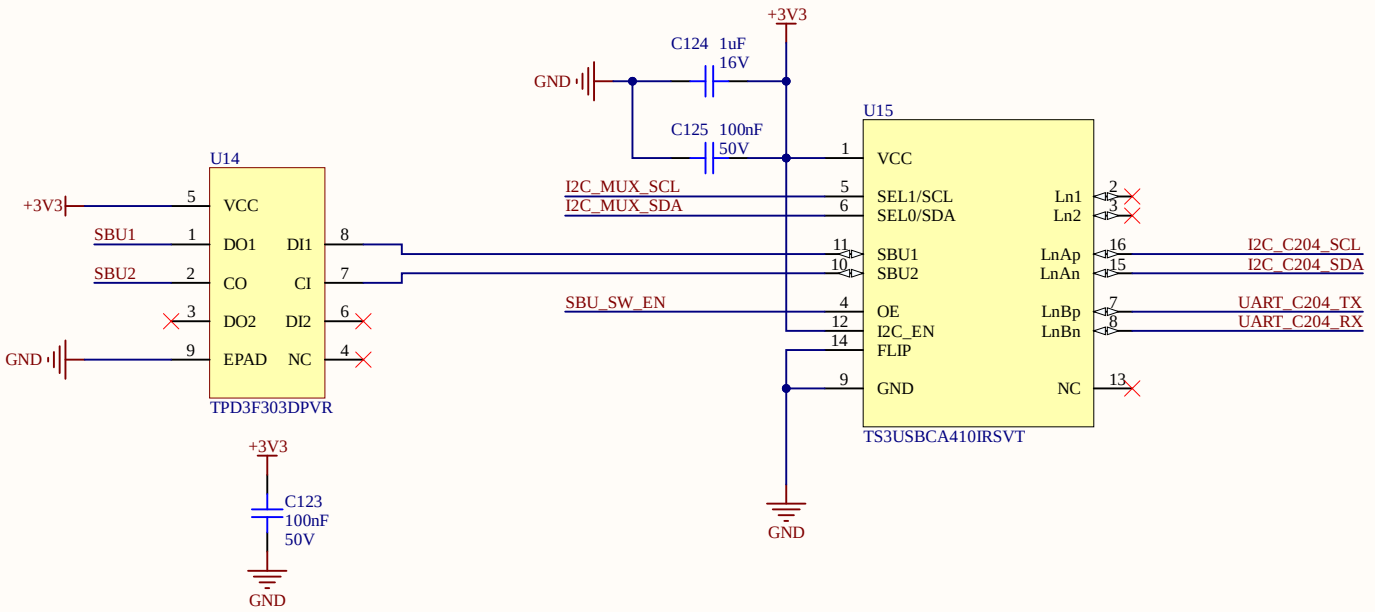

Title	**User Interface**		*Acme_CPU* *30 N Gould St suite 4000* *Sheridan WY 82801*
Size: A4	Number: 14	Revision: 0.1	
Date: 12.03.2022	Time: 2:00:43	Sheet 14 of 51	
File: 9. MUX.SchDoc			

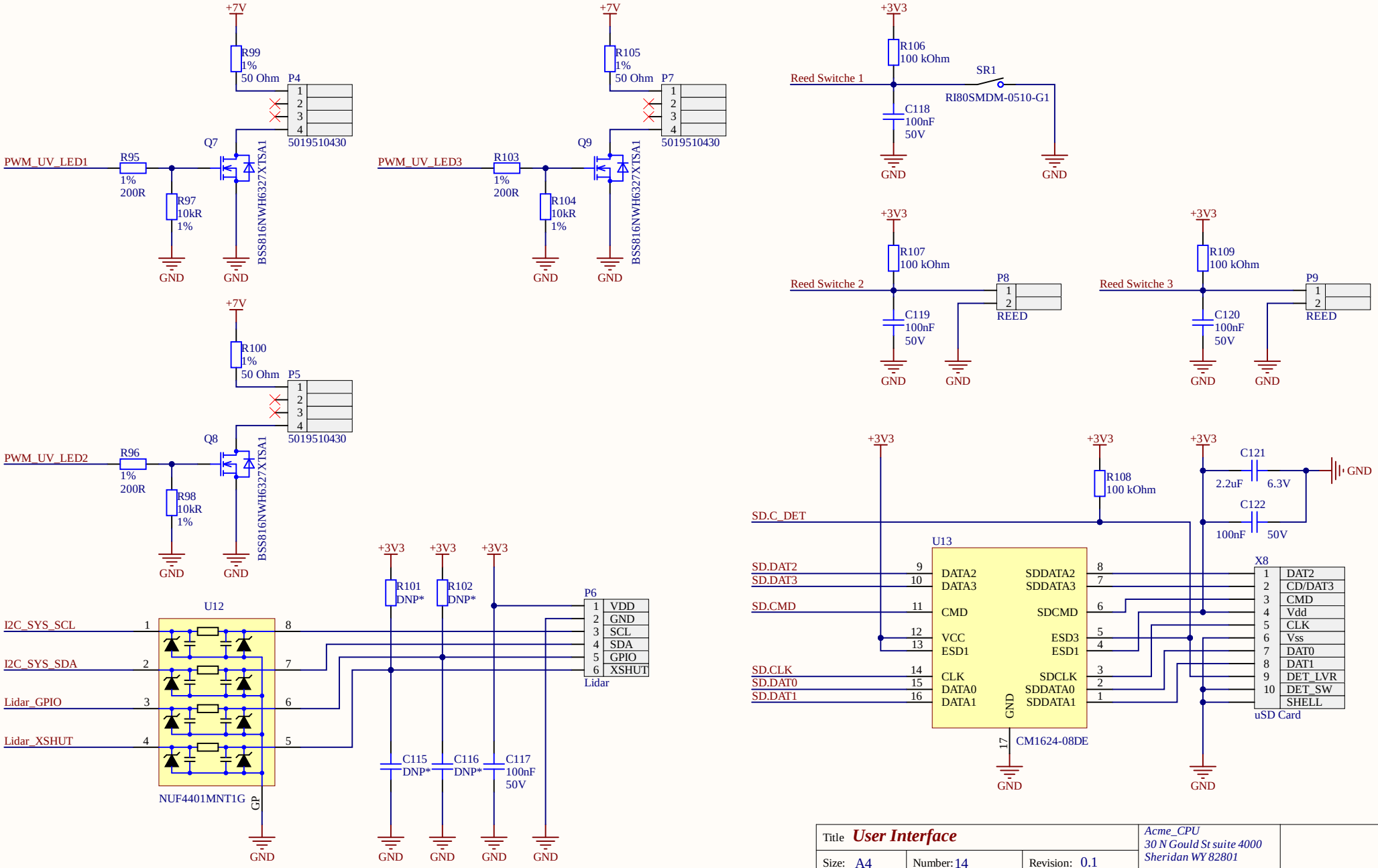

Title	**User Interface**		*Acme_CPU* *30 N Gould St suite 4000* *Sheridan WY 82801*
Size: A4	Number: 14	Revision: 0.1	
Date: 12.03.2022	Time: 2:00:43	Sheet 14 of 51	
File: 8. PERIPH.SchDoc			

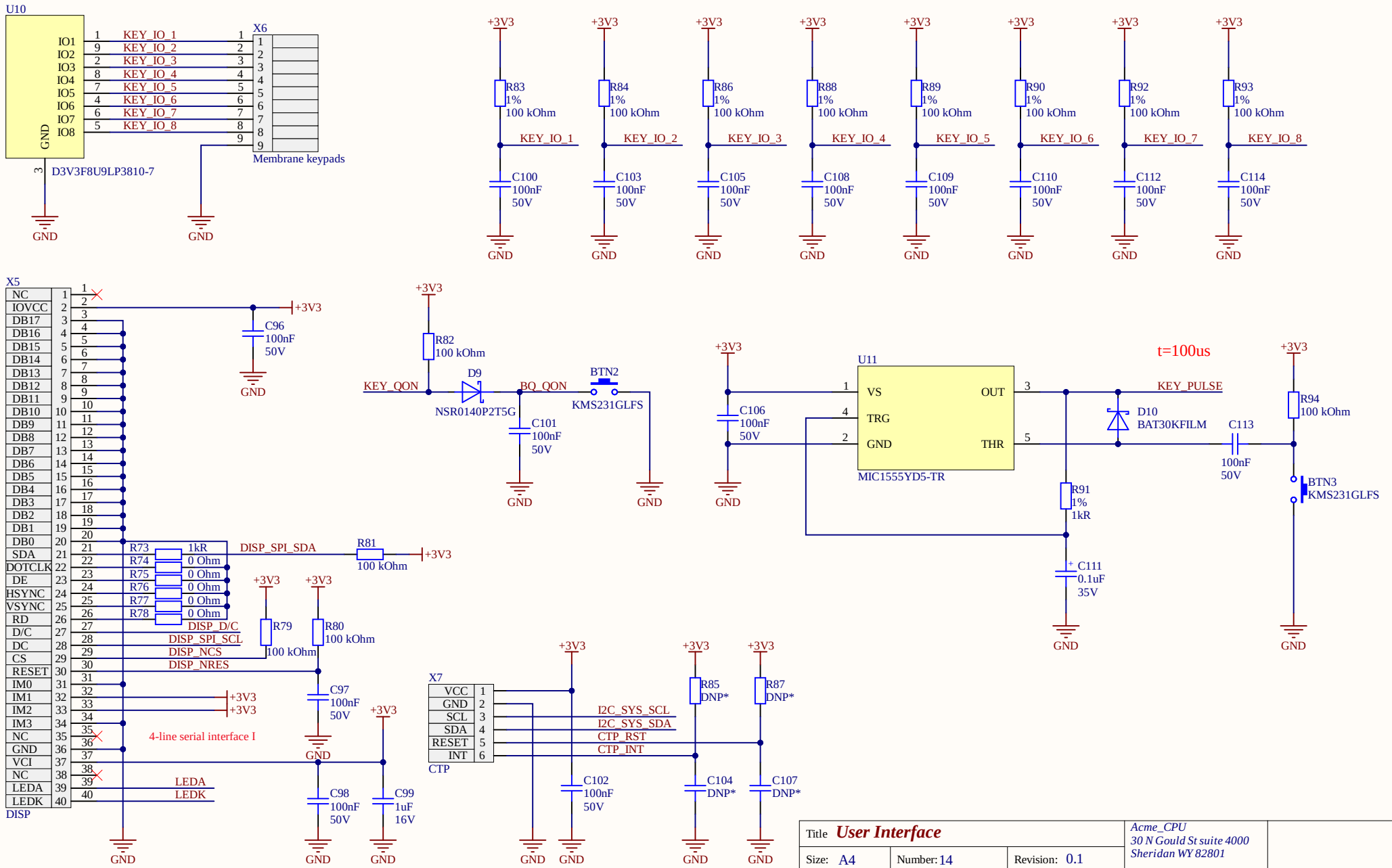

Title	***User Interface***		*Acme_CPU* *30 N Gould St suite 4000* *Sheridan WY 82801*
Size: A4	Number: 14	Revision: 0.1	
Date: 12.03.2022	Time: 2:00:43	Sheet 14 of 51	
File: 7. User interface.SchDoc			

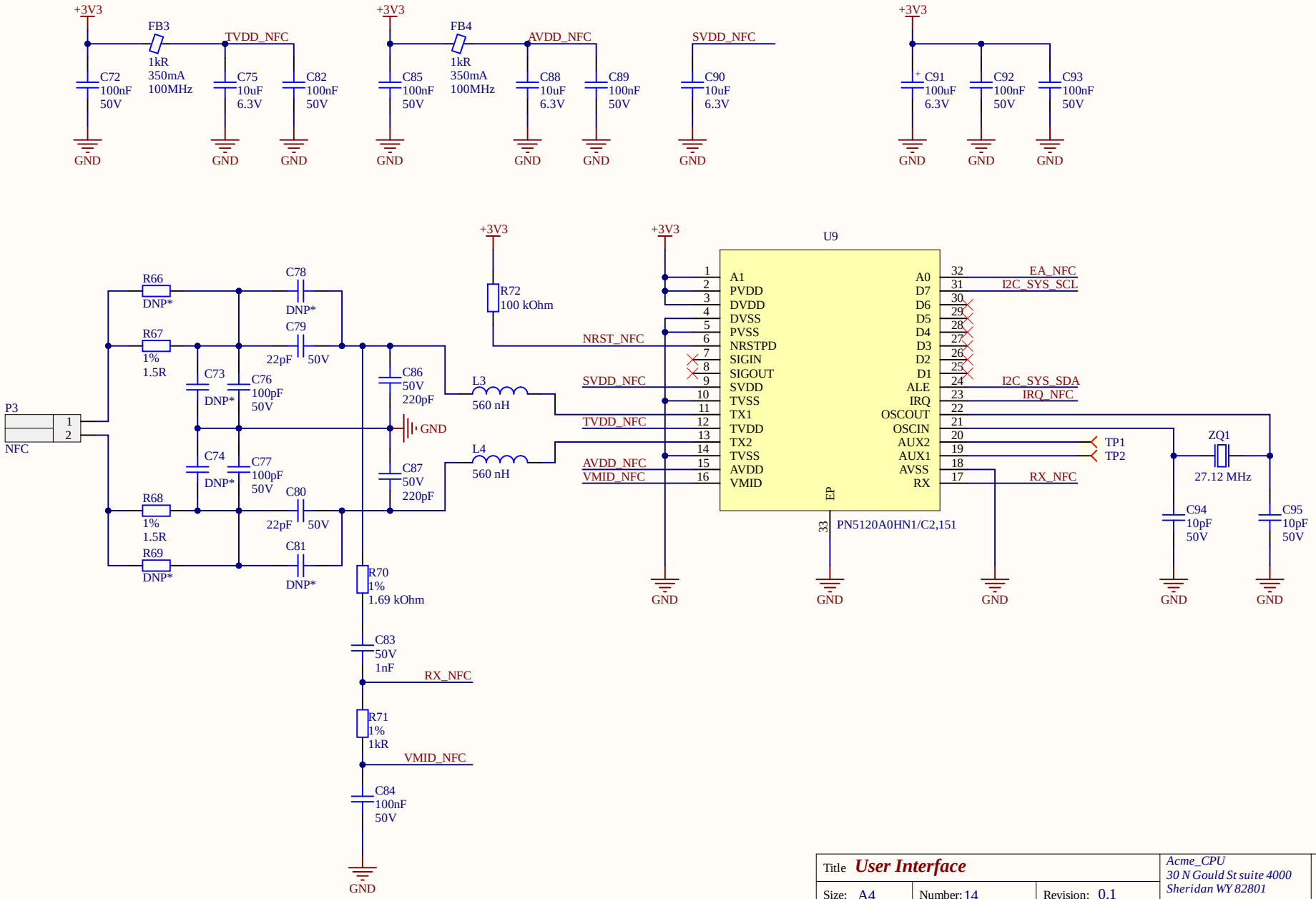

Title	**User Interface**		*Acme_CPU* *30 N Gould St suite 4000* *Sheridan WY 82801*
Size: A4	Number: 14	Revision: 0.1	
Date: 12.03.2022	Time: 2:00:43	Sheet 14 of 51	
File: 6. NFC.SchDoc			

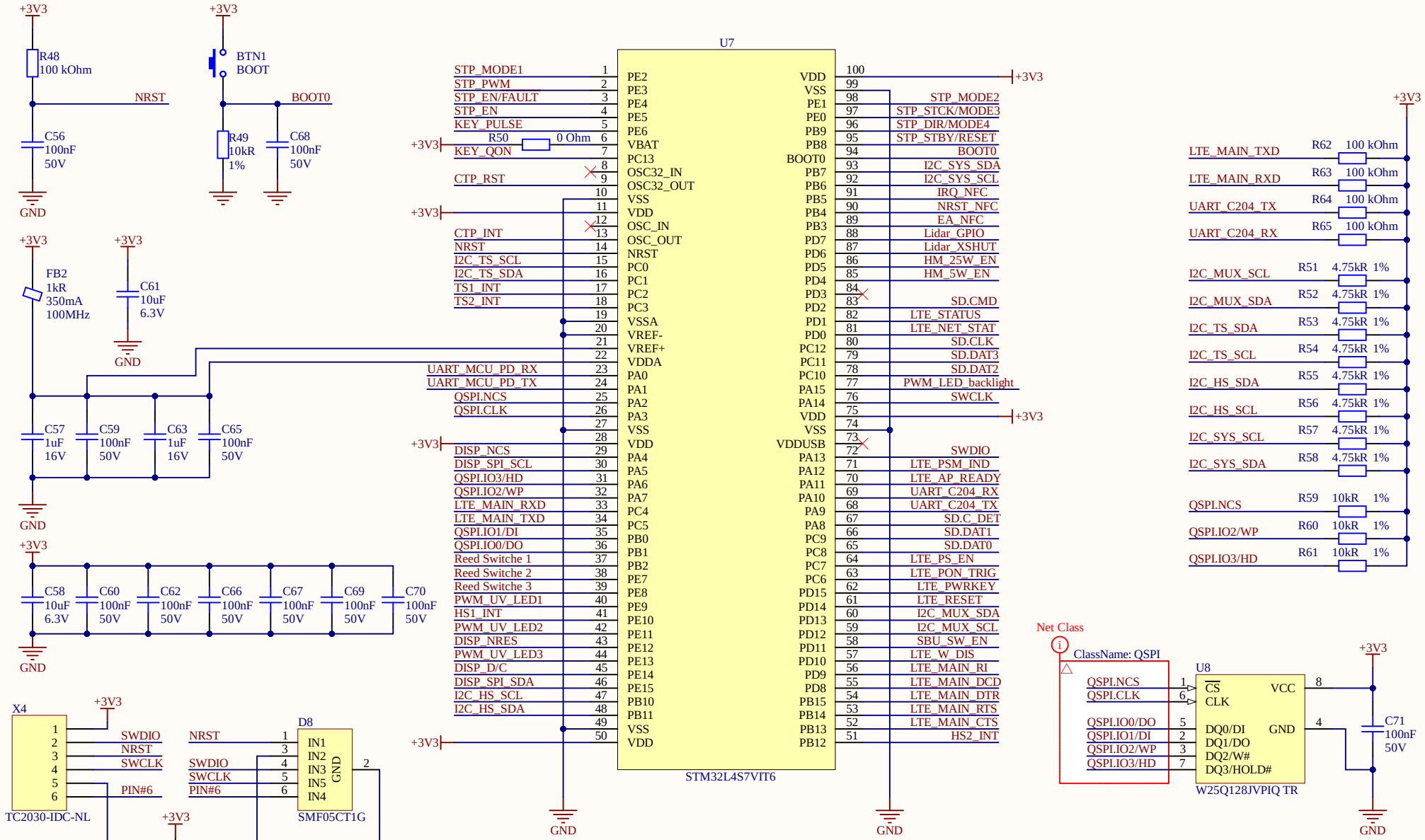

Title	***User Interface***		*Acme_CPU* *30 N Gould St suite 4000* *Sheridan WY 82801*
Size: A4	Number: 14	Revision: 0.1	
Date: 12.03.2022	Time: 2:00:44	Sheet 14 of 51	
File: 5. MCU.SchDoc			

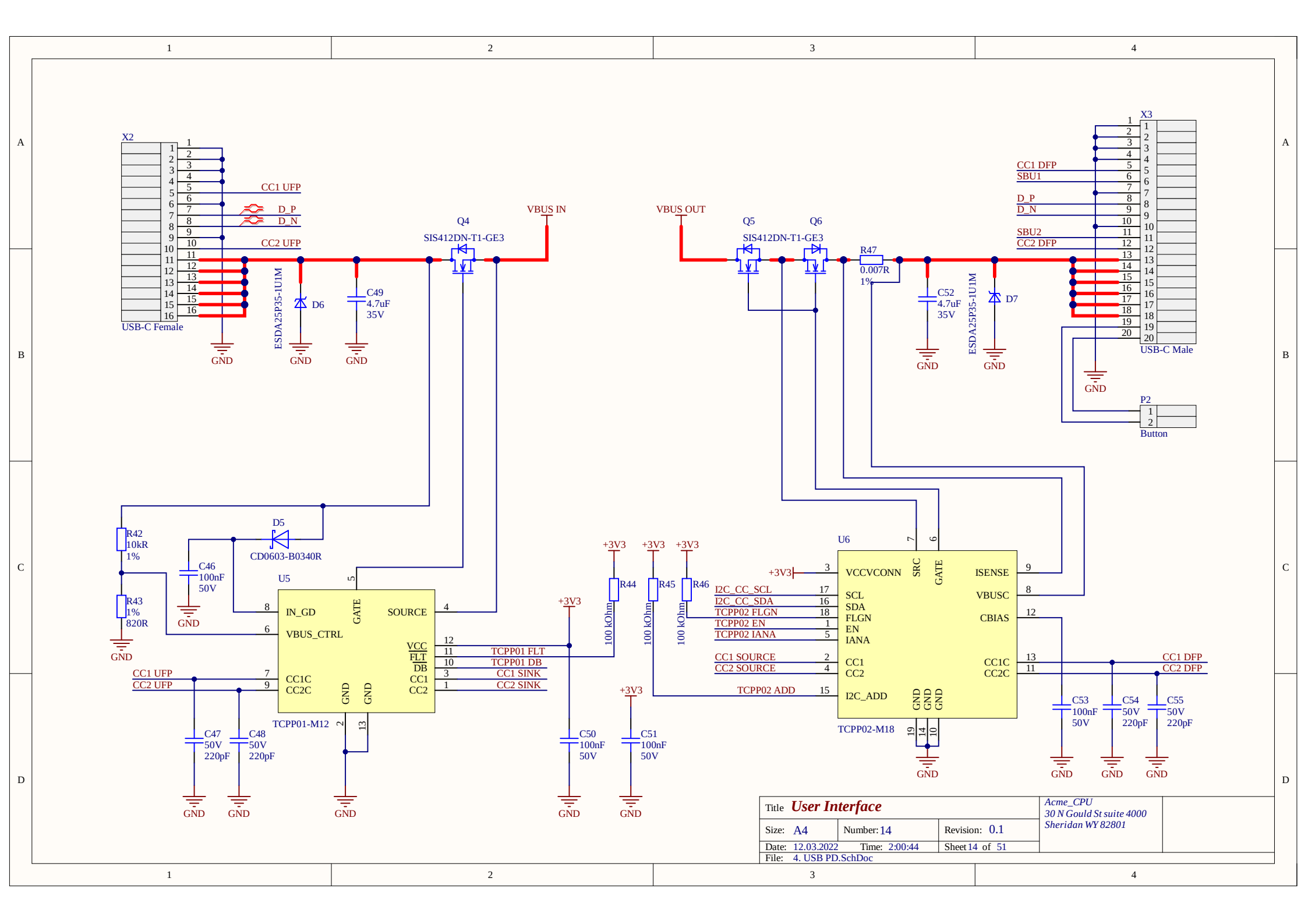
X2
USB-C Female
CC1 UFP
CC2 UFP
D_P
D_N
GND
ESDA25P35-1U1M
D6
C49
4.7uF
35V
Q4
SIS412DN-T1-GE3
VBUS IN
VBUS OUT
Q5
Q6
SIS412DN-T1-GE3
R47
0.007R
1%
C52
4.7uF
35V
D7
X3
USB-C Male
CC1 DFP
SBU1
SBU2
CC2 DFP
P2
Button
R42
10kR
1%
R43
1%
820R
C46
100nF
50V
D5
CD0603-B0340R
U5
IN_GD
GATE
SOURCE
VBUS_CTRL
VCC
FLT
DB
CC1
CC2
CC1C
CC2C
TCPP01-M12
TCPP01 FLT
TCPP01 DB
CC1 SINK
CC2 SINK
CC1 UFP
CC2 UFP
C47
50V
220pF
C48
50V
220pF
+3V3
R44
R45
R46
100 kOhm
C50
100nF
50V
C51
100nF
50V
U6
VCCVCONN
SRC
GATE
ISENSE
VBUSC
CBIAS
SCL
SDA
FLGN
EN
IANA
CC1
CC2
I2C_ADD
CC1C
CC2C
TCPP02-M18
I2C_CC_SCL
I2C_CC_SDA
TCPP02 FLGN
TCPP02 EN
TCPP02 IANA
CC1 SOURCE
CC2 SOURCE
TCPP02 ADD
C53
100nF
50V
C54
50V
220pF
C55
50V
220pF
Title User Interface
Size: A4
Number: 14
Revision: 0.1
Date: 12.03.2022
Time: 2:00:44
Sheet 14 of 51
File: 4. USB PD.SchDoc
Acme_CPU
30 N Gould St suite 4000
Sheridan WY 82801

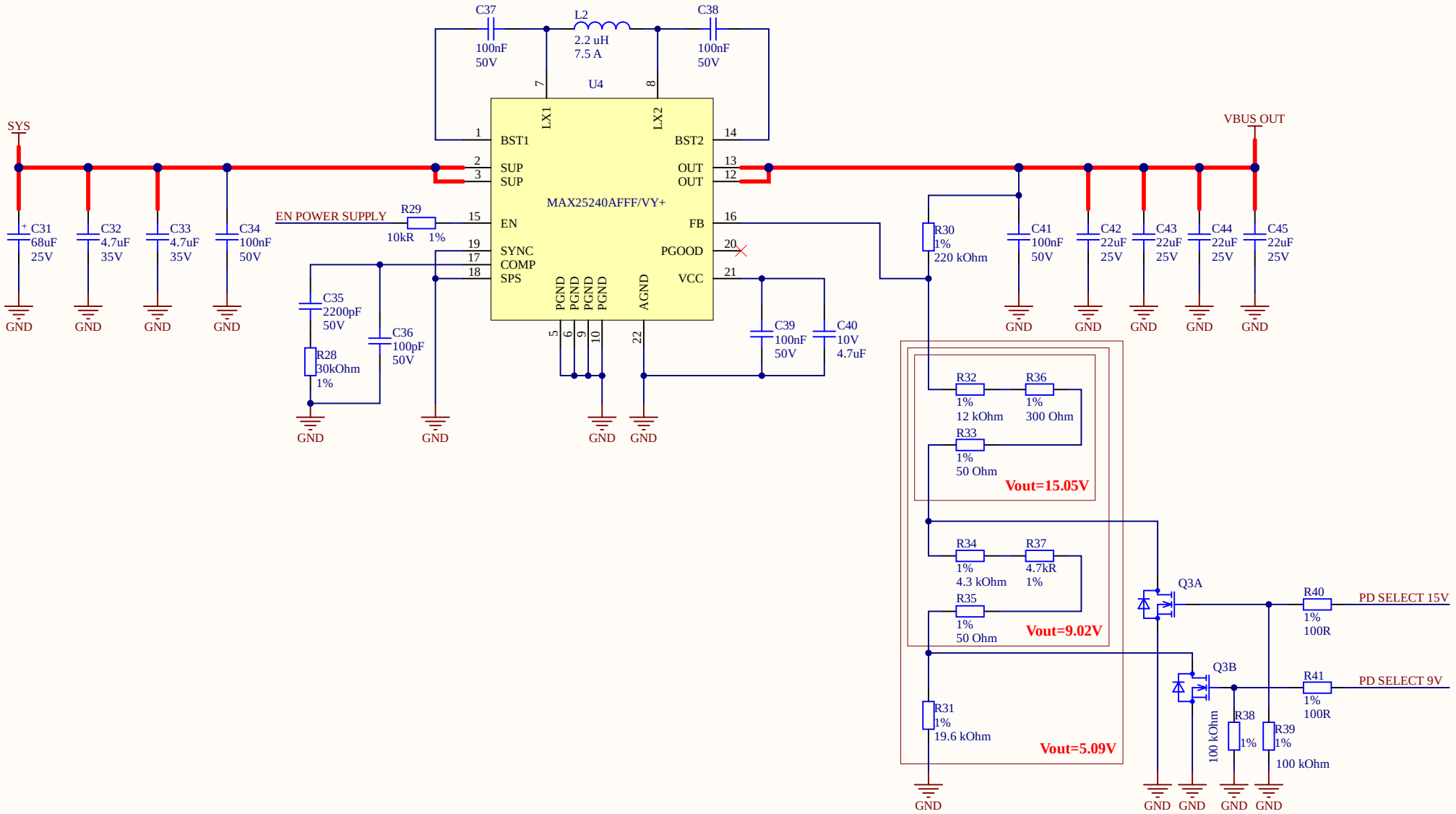

Title **User Interface**			*Acme_CPU* *30 N Gould St suite 4000* *Sheridan WY 82801*
Size: A4	Number: 14	Revision: 0.1	
Date: 12.03.2022	Time: 2:00:44	Sheet 14 of 51	
File: 3. Power PD.SchDoc			

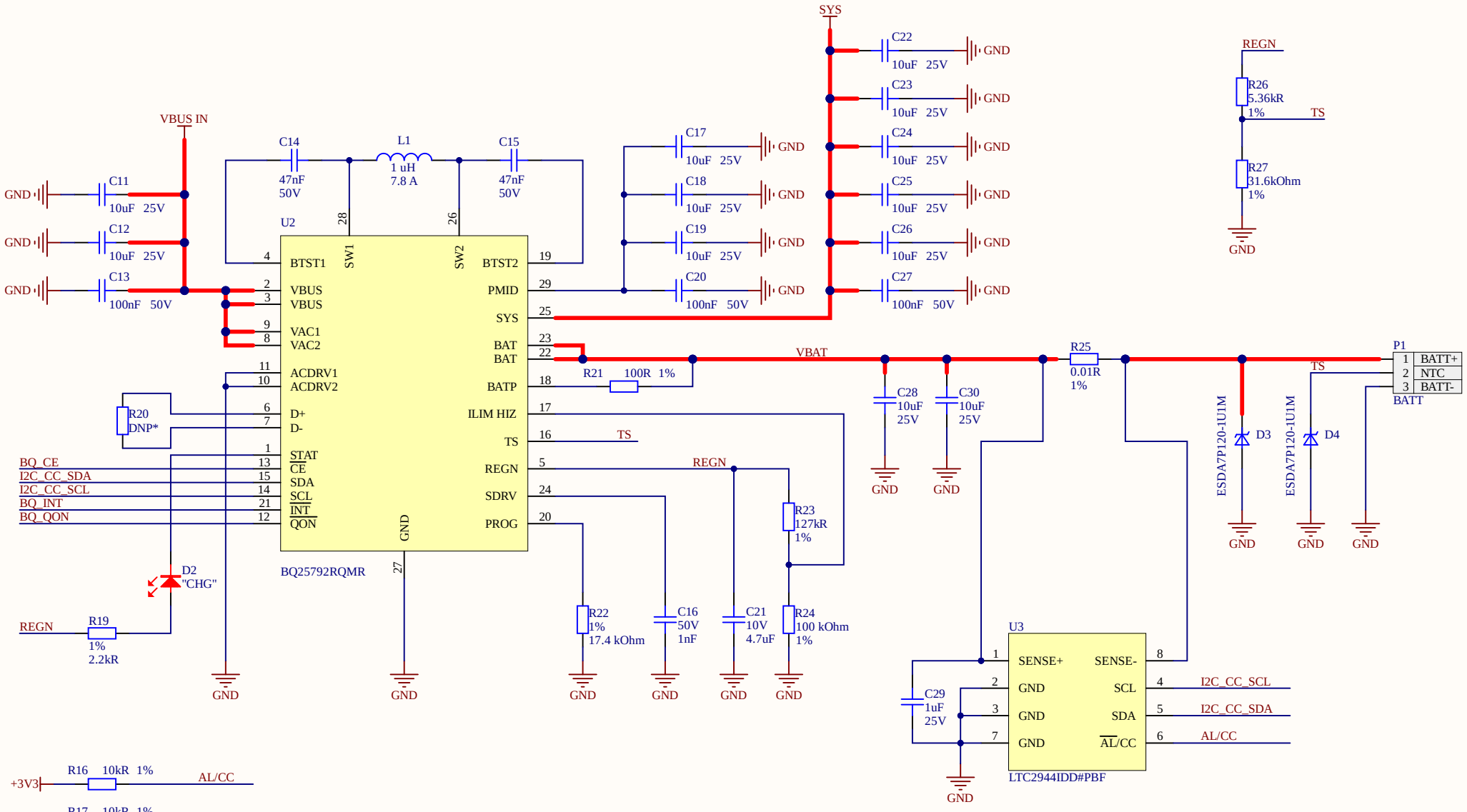

Title **User Interface**			*Acme_CPU* *30 N Gould St suite 4000* *Sheridan WY 82801*
Size: A4	Number: 14	Revision: 0.1	
Date: 12.03.2022	Time: 2:00:44	Sheet 14 of 51	
File: 2. Charger.SchDoc			

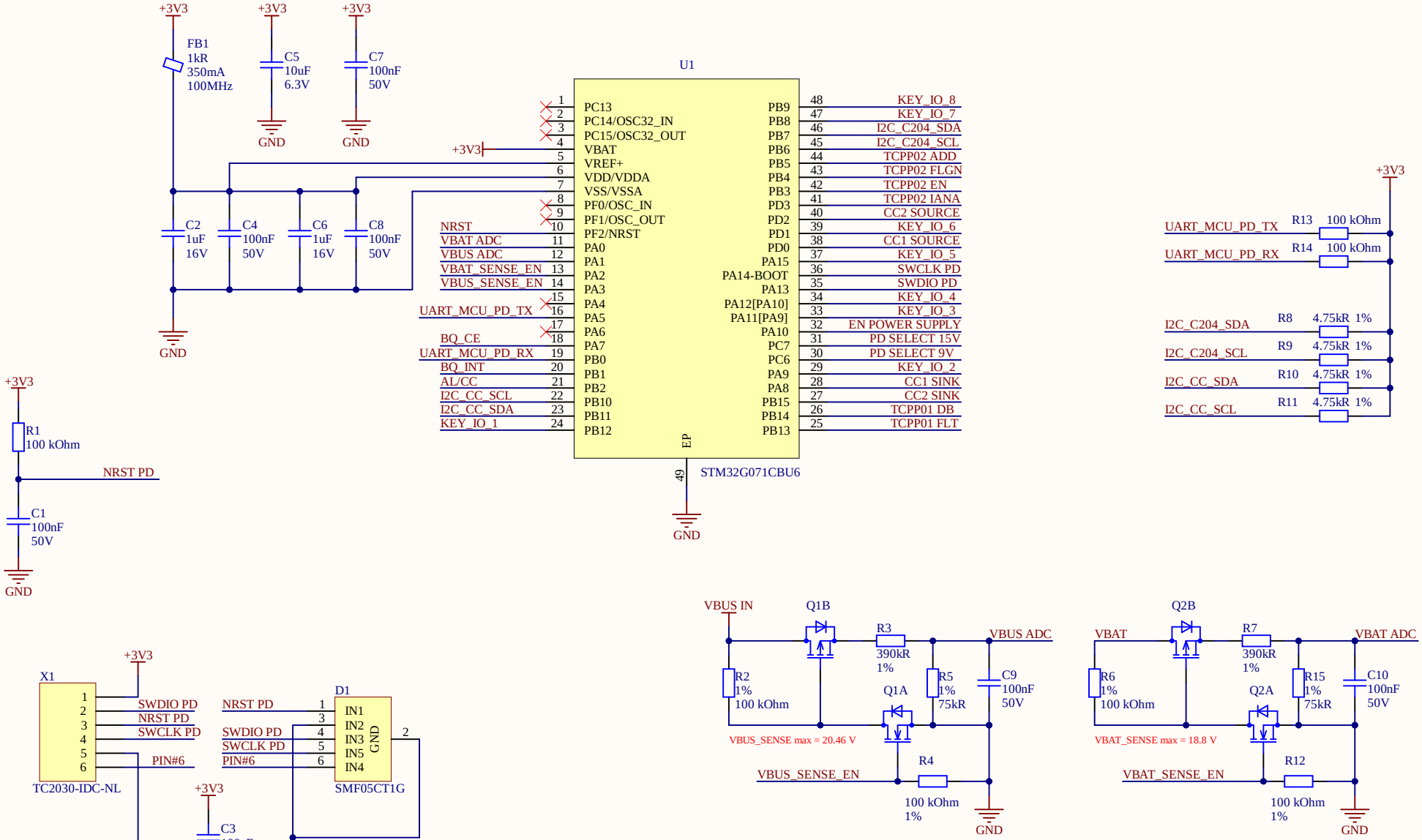

Title	**User Interface**		*Acme_CPU* *30 N Gould St suite 4000* *Sheridan WY 82801*
Size: A4	Number: 14	Revision: 0.1	
Date: 12.03.2022	Time: 2:00:45	Sheet 14 of 51	
File: 1. MCU PD.SchDoc			