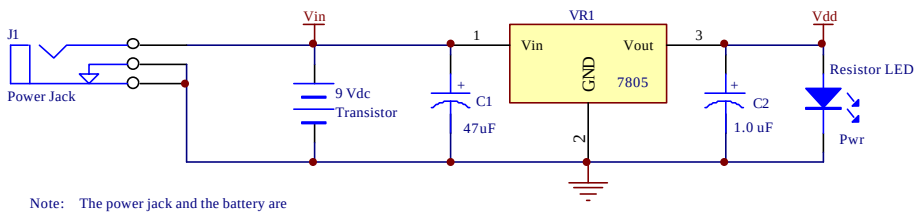

Note: The power jack and the battery are mechanically interlocked to assure they are used mutually exclusively.

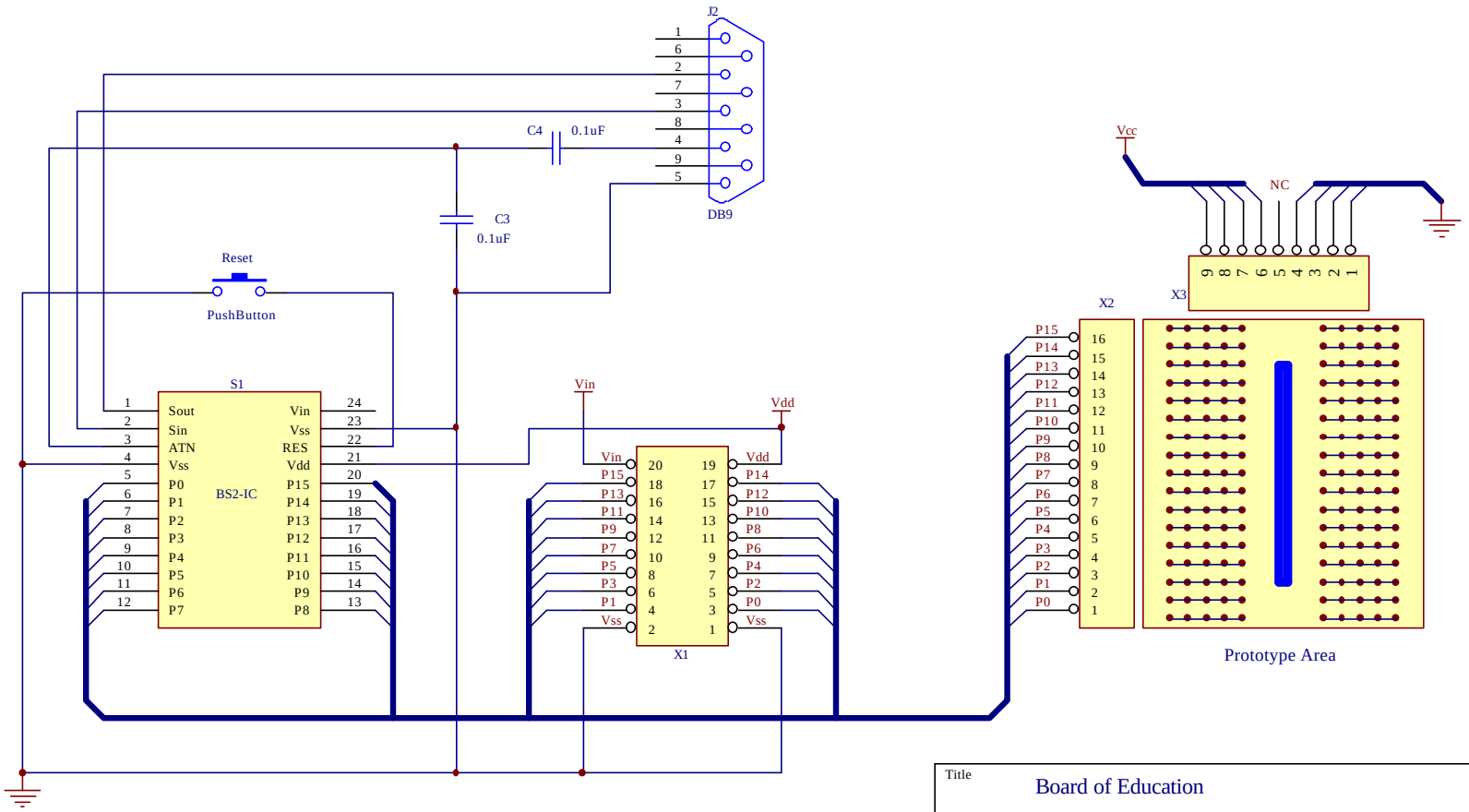

Title: Board of Education		
Size: A	Number	Revision: A
Date: 20-Oct-1999		Sheet 1 of 1
File: C:\Client98\Sch98\SCHs\BOE.sch		Drawn By: John Barrowman