FOR CONTINUATION OF ROUTES REFER TO EMCOR DRAWING 00(51)001

UTILITY SUPPLY SCHEDULE:

REF	DESCRIPTION	SUPPLY	MIN. PRESSURE	FLOW RATE
W11	EMR OFFICE WATER STORAGE TANK	WATER	1bar	1.00 litres/s
W12	EMR BUILDING	WATER	1bar	0.60 litres/s
W13	EMR BUILDING	WATER	1bar	0.60 litres/s
W14	EMR BUILDING	WATER	1bar	0.60 litres/s
W15	EMR BUILDING	WATER	1bar	14.0 litres/s
G7	EMR BUILDING	GAS	1bar	650 m^3/s

WATER CONNECTIONS W12 TO W15 TO TERMINATE WITH STOP COCK AT LOW LEVEL

FIRE HYDRANT PIPE TRENCH DETAIL

DETAIL FOR ø125mm 110.9mm NOMINAL BORE H.P.P.E (HIGH PRESSURE POLYETHELENE – SDR11

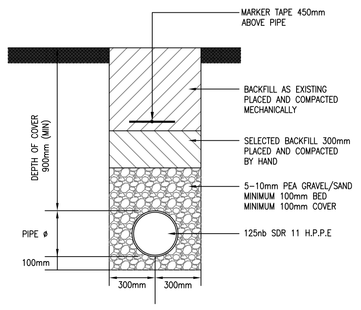

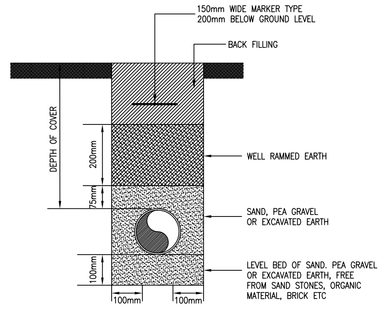

SERVICE:	DEPTH:
WATER	750mm (900mm BELOW ROADWAY)
GAS	600mm (750mm BELOW ROADWAY)

NOTE:

WHERE BURIED PIPEWORK IS NON-METALLIC PLASTIC MARKER TAPE TO HAVE STAINLESS STEEL INSERT WIRE BROUGHT OUT TO TEST POSITIONS AT GROUND LEVEL

DRAWPIT SCHEDULE:

REF	LENGTH	WIDTH	DEPTH	COVER TYPE
CM1	2000	2000	1500	HARD STANDING
CM2	2000	2000	1500	HARD STANDING
CM3	2000	2000	1500	HARD STANDING
CM4	1500	1500	1500	HARD STANDING
CM5	1500	1500	1500	HARD STANDING
CM6	2000	2000	1500	HARD STANDING
CM7	2000	2000	1500	HARD STANDING
CM8	1500	1500	1500	SOFT DIG
CM9	2000	2000	1500	SOFT DIG
CM10	2000	2000	1500	SOFT DIG
LV1	600	600	1000	HARD STANDING
LV2	1000	1000	1000	HARD STANDING
LV3	600	600	1000	HARD STANDING
LV4	600	600	1000	HARD STANDING
LV5	600	600	1000	LIGHTING COLUMN
LV6	600	600	1000	LIGHTING COLUMN
LV7	600	600	1000	HARD STANDING
LV8	600	600	1000	HARD STANDING
LV9	600	600	1000	SOFT DIG
LV10	–	–	–	OMITTED
LV11	600	600	1000	HARD STANDING
LV12	–	–	–	OMITTED
LV13	600	600	1000	SOFT DIG
LV14	600	600	1000	SOFT DIG
LV15	600	600	1000	HARD STANDING
LV16	600	600	1000	SOFT DIG
HV1	1500	1500	1500	HARD STANDING
HV2	1500	1500	1500	HARD STANDING
HV3	1500	1500	1500	HARD STANDING
HV4	1500	1500	1500	HARD STANDING
HV5	1500	1500	1500	HARD STANDING
HV6	1500	1500	1500	SOFT DIG
HV7	1500	1500	1500	SOFT DIG
HV8	–	–	–	OMITTED
HV9	1500	1500	1000	HARD STANDING
HV10	1500	1500	1500	SOFT DIG
HV11	1500	1500	1500	SOFT DIG
HV12	1500	1500	1000	SOFT DIG
HV13	1000	1000	1000	SOFT DIG
HV14	1500	1500	1000	HARD STANDING
HV15	1000	1000	1000	HARD STANDING
HV16	1500	1500	1000	HARD STANDING
HV17	1000	1000	1000	HARD STANDING
HV18	1500	1500	1000	HARD STANDING
HV19	1500	1500	1000	SOFT DIG
HV20	–	–	–	OMITTED

GUIDANCE DETAIL SHOWING THRUST BLOCKS (COMPLYING WITH WATER BYELAW No.53)

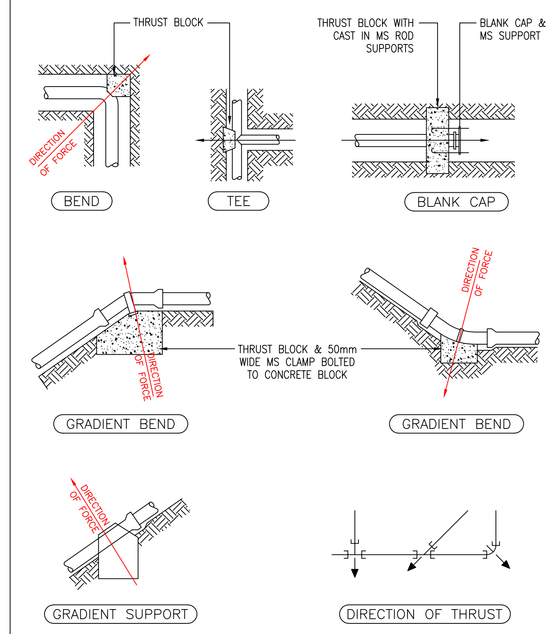

GRADIENT	SPACING OF BLOCKS
1 IN 2	5.5 m
1 IN 3	11.0 m
1 IN 4	11.0 m
1 IN 5	16.5 m
1 IN 6	22 m

SOIL	SAFE BEARING PRESSURE (N/m^2)
SOFT CLAY	24000
SAND	48000
SAND & GRAVEL	72000
SAND & GRAVEL BONDED WITH CLAY	96000
SHALE	240000

NOTES :

1. ALL BLOCKS SHALL BE FORMED BY USING SHUTTER SUPPORTS.
2. SEE STANTON & STANLEY TECHNICAL DATA SHEET FOR CALCULATIONS OF THRUST.
3. ISSUED ONLY AS A GUIDE TO INSTALLATION

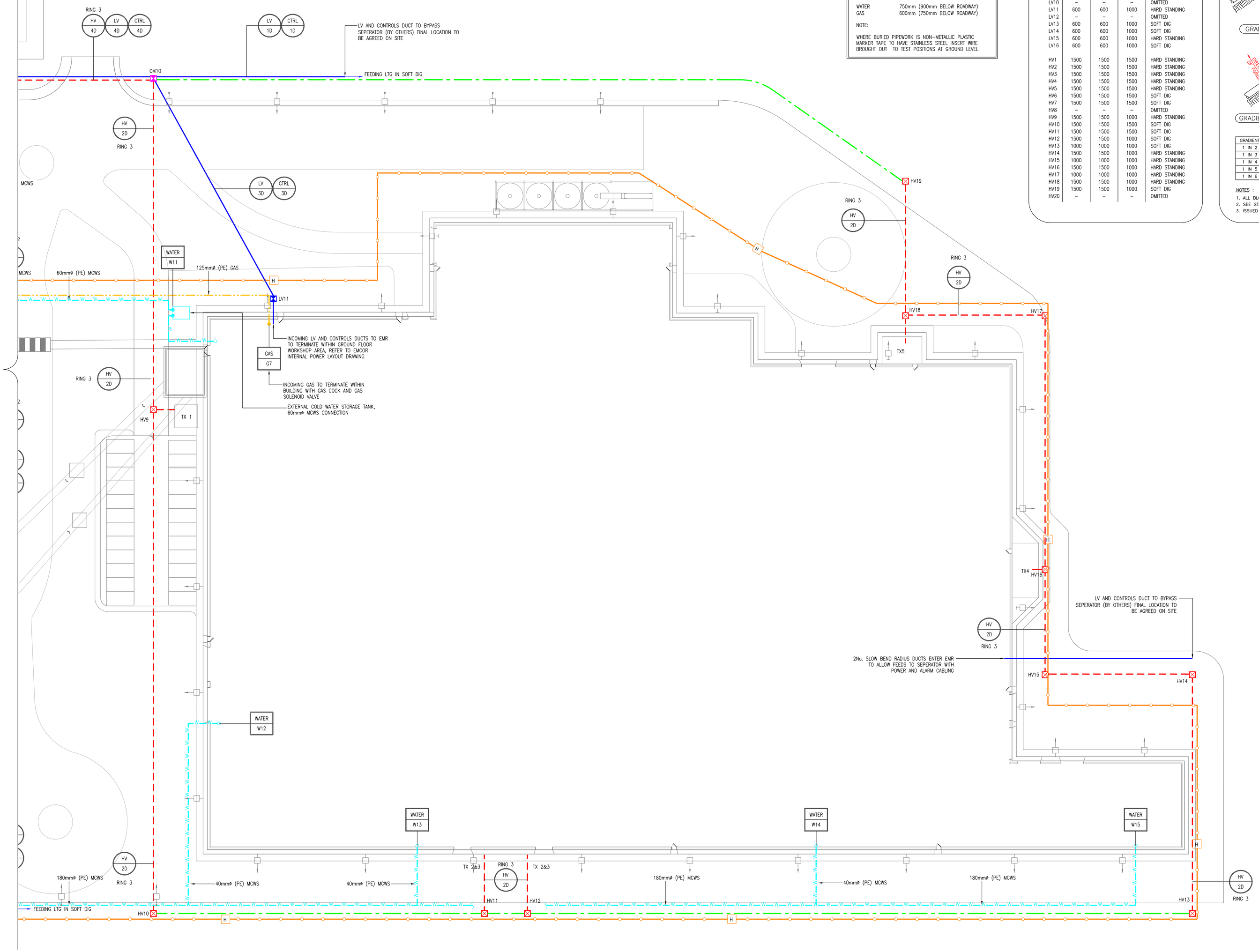

SECTION THROUGH CABLE/CABLE DUCT INSTALLATION BELOW OPEN GROUND

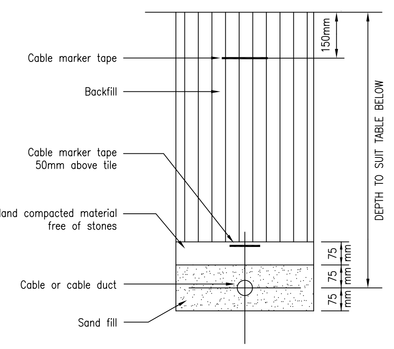

BURIED CABLE INSTALLATION DETAILS

HORIZONTAL SPACING REQUIREMENTS (mm)				
SERVICE	HV	LV	ELV	PIPED SERVICES
HV	300	1000	1000	1000
LV	1000	300	300	300
ELV	1000	300	50	300

SECTION THROUGH CABLE/CABLE DUCT INSTALLATION BELOW HARDSTANDING AREAS (ROADS AND FOOTPATHS)

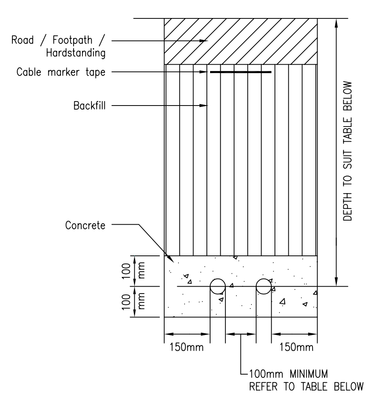

BURIED CABLE INSTALLATION DETAILS

MINIMUM DEPTH OF LAYING (mm)			
SERVICE	BURIED DIRECT IN GROUND	UNDER ROAD OR HARDSTANDING IN DUCTS	UNDER FOOTPATHS IN DUCTS
HV	900	900	500
LV	750	750	400
ELV	750	750	400

THIS DRAWING IS COPYRIGHT AND MAY NOT BE REPRODUCED OR MADE USE OF UNLESS EXPRESSLY AGREED BY EMCOR ENGINEERING SERVICES LIMITED ©

NOTES

1. This drawing shall not be used as a working drawing. All scaled dimensions shall be verified on site.
2. For architectural and structural details please refer to appropriate specialist drawings
3. This drawing is indicative only, the HV, Water, Gas and Fire Hydrant supplies are to be designed at a later date, this drawing details proposed routes only.
4. The first fire hydrant location shall be no more than 90m from the main entrance, from this point the hydrants shall be spaced so that they are no more than 90m apart.
5. Fire mains designed in accordance with BS 9990: 2006
6. Fire hydrant design assumes main supply is capable of providing 1500 lt/min minimum flow.
7. Gas and Water final connection details to be added
8. Water mains sized using Wavin Polyethylene pipework
9. BT installation to be agreed with BT

LEGEND

- RING 1 ← HV RING REFERENCE NUMBER
- HV / 5D — HIGH VOLTAGE; NUMBER OF 150mmø DUCTS
- LV / 5D — LOW VOLTAGE; NUMBER OF 150mmø DUCTS
- CTRL / 5D — CONTROLS CABLING (DATA) DUCTS; NUMBER OF 100mmø DUCTS
- DENOTES UNDER GROUND HV CABLE ROUTE
- DENOTES UNDER GROUND LV/CTRLS CABLE ROUTES AS DETAILED
- HV CABLE DRAW PIT, SEE SCHEDULE FOR SIZE DETAILS (TBC)
- LV CABLE DRAW PIT, SEE SCHEDULE FOR SIZE DETAILS (TBC)
- CM — COMBINED HV/LV CABLE DRAW PIT, SEE SCHEDULE FOR SIZE DETAILS (TBC)
- DENOTES FIRE HYDRANT PIPEWORK
- W — DENOTES WATER MAIN BELOW GROUND ROUTE
- DENOTES GAS MAIN BELOW GROUND ROUTE
- H — FIRE HYDRANT POSITION

INCOMING NATURAL GAS SUPPLY TO BE CAPABLE OF 100,000kW @ 1.7 BAR

FOR INTERNAL DUCT ROUTES TO EMR BUILDING REFER TO EMCOR DRAWING 00(51)010

FIRE HYDRANT MAIN TO BE 180MMø SDR17 BELOW GROUND PIPEWORK

Rev	Description	Date	Eng
C2	GAS & WATER SUPPLY SIZES AMENDED, IES COLD WATER TANK LOCATION AMENDED. RODECS WATER SUPPLY & GAS ROUTES AMENDED. ADDITIONAL WATER SUPPLY ADDED, CONNECTION DETAILS ADDED, GAS & WATER DISTRIBUTION ROUTES AMENDED. EMR GAS SUPPLY REINSTATED. GAS AND WATER UPDATED	01.11.12	CVR
C1	RWH TANK OMITTED AND RAISED TO CONSTRUCTION ISSUE	4.10.12	CJ
A1	FOR APPROVAL	19.9.12	CJ
P3	UPDATED BASE PLAN ADDED	14.8.12	CJ
P2	MECHANICAL SIZES ADDED	25.7.12	CJ
P1	ISSUED FOR APPROVAL	27.6.12	CJ

Client

VINCI CONSTRUCTION UK

emr ies Innovative Environmental Solutions

EMCOR Engineering Services

EMCOR Engineering Services Ltd
One Cranmore Drive,
Shirley, Solihull,
West Midlands,
B90 4RZ
TEL: 0121 0845 200 6314 FAX: 0845 066 4776

Project: IES OLDBURY

Title: EXTERNAL BUILDING SERVICES ROUTES SHEET 2 OF 2

Discipline: COMBINED

Status: CONSTRUCTION

Drawn	Checked	Size
CJ	KB	A0

Job No	Scale	Date
C00062	1:250	27.06.12

Drawing No: 00(51)002 Rev: C2