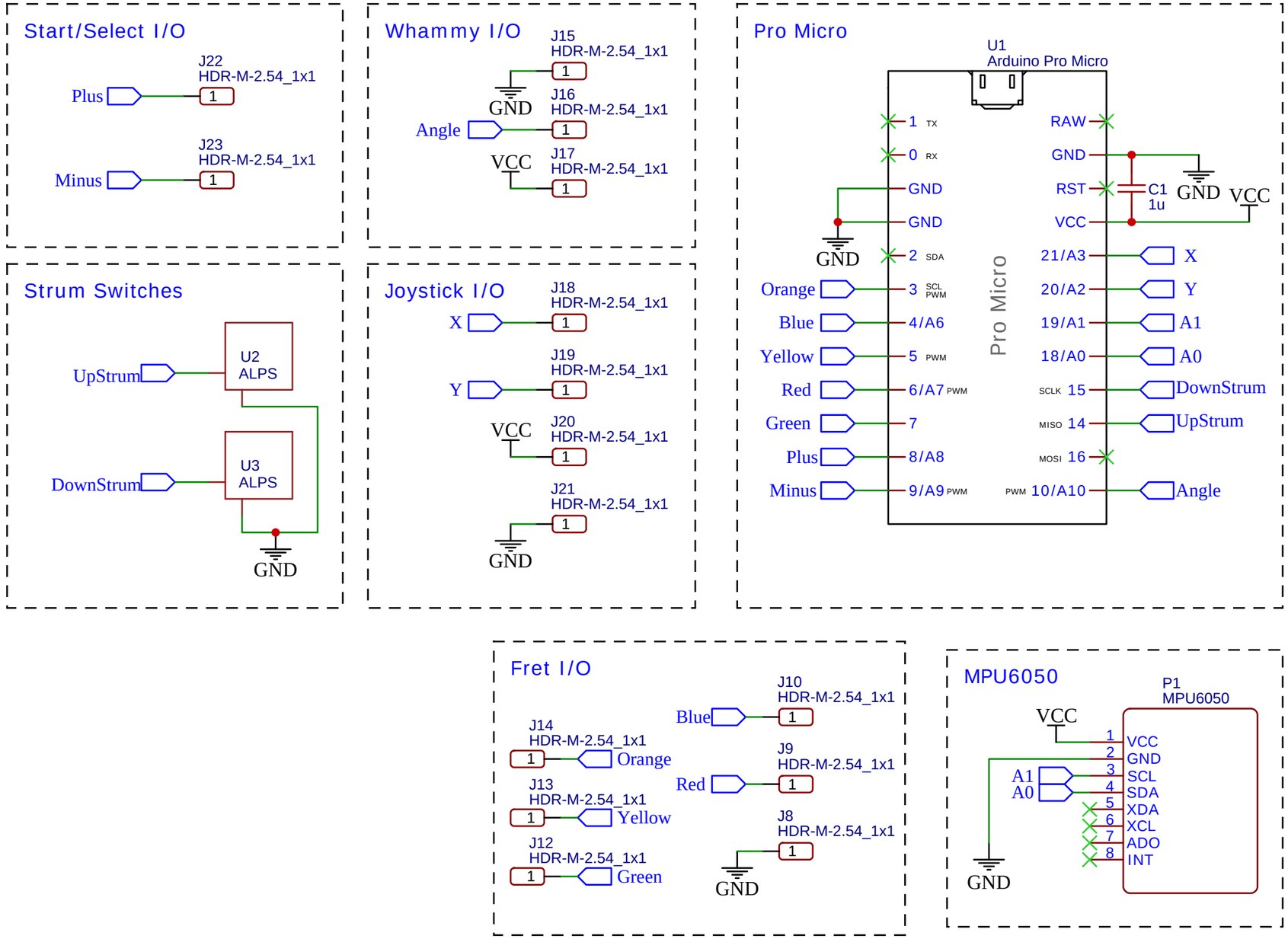

TITLE: GH3 Strum Bar Schematic		REV: 1.0
EasyEDA	Company: Your Company	Sheet: 1/1
	Date: 2021-01-13 Drawn By: acooley960	

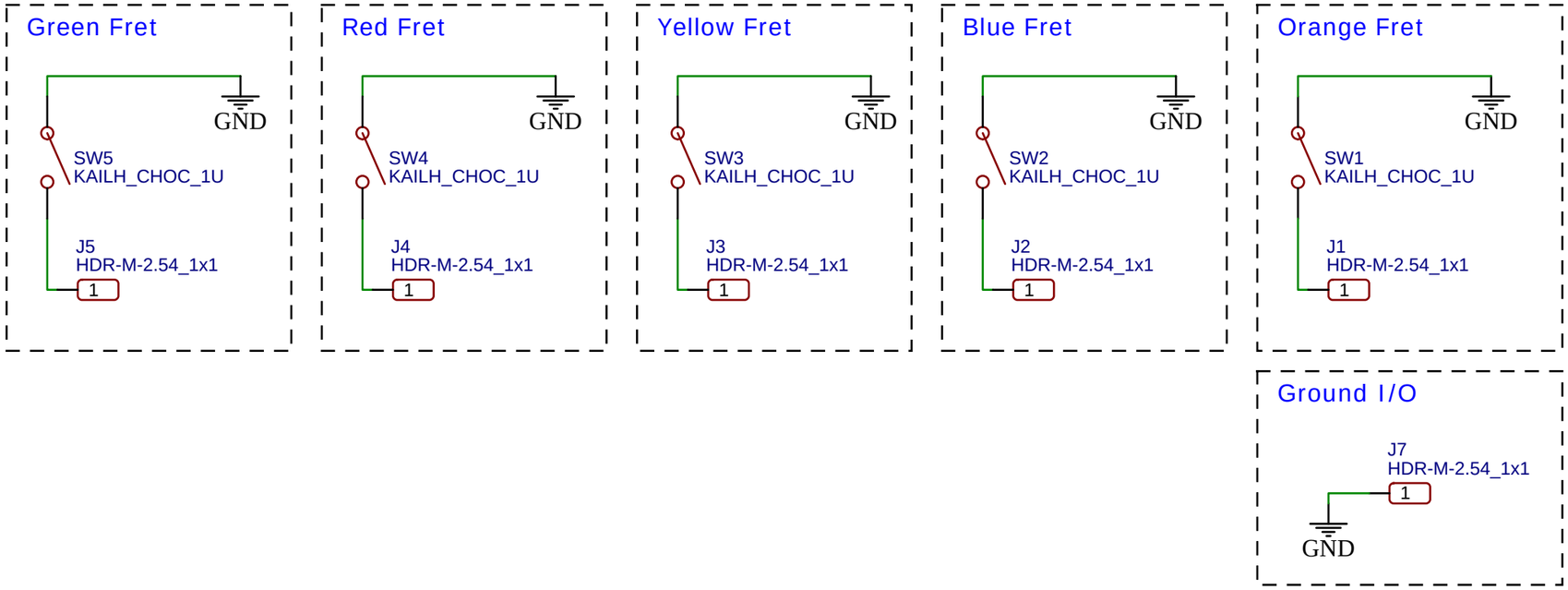

TITLE: GH3 Fret Schematic		REV: 1.0
EasyEDA	Company: Your Company	Sheet: 1/1
	Date: 2021-01-13 Drawn By: acooley960	