IDENTIDEM.design

LRF45

Build your own LiDAR-powered, lens-coupled 4x5 rangefinder

hello@identidem.design

Introduction

If you've been following my designs you might be familiar with the POLA.SLR1. It came from a design challenge I set myself to see whether I could build a modern 3D-printable Polaroid SLR. If you want to build your own, you can find it on Printables. From that, and as yet unpublished, I designed and built the MULTI.SLR - exactly the same as the previous iteration, but with removable backs. Mine has a Polaroid back, and a 4x5 back.

The problem is that the design didn't fully cover 4x5 - that back was really only good for using with roll film 4x5 backs, shooting medium format. So I jumped in and spent many hours trying to get to a design done for a true 3D-printable 4x5 SLR. At some stage I realised that it would just be too big and clunky to be feasible, so I shelved it.

At the same time, I really started enjoying working with the electronics on the Polaroid back, learning much to improve it to a point where it not only kept track of the film count, but also showed battery life. Later I even added a pretty accurate light-meter. Through this process I was introduced to Adafruit's Feather RP2040, which quickly became my favourite dev board to work with as it had built-in battery management and the wonderfully convenient STEMMA QT.

Browsing through the amazing range of STEMMA QT breakout boards on offer, quite a few time-of-flight sensors caught my eye. I'd had the idea of an electronic version of those classic cold-shoe rangefinders for a while, and decided to give it a try. I had some OLED panels and beam-splitters from previous projects, as well as rangefinder optics from a gutted Polaroid OneStep 2

I ended up with the EYE, a cold-shoe electronic rangefinder and light-meter with a GUI overlaid in the viewfinder.

Of course the next natural step was to design and build a camera that would somehow couple the EYE with the lens, and of course it had to be a proper 4x5 camera.

Many, many iterations, components, and field-tests later, and with a lot of help from the Filament and Film community, the LRF45 is ready for the world.

Bill of Materials

You will need all of the following to build your own LRF45.

3D-printed parts

- Camera body for a **Fujinon 105mm f5.6** lens - you can use the STEP files to adjust the body to your own lens if desired
- Camera back
- Grip
- Elastic hook
- Body cable cover
- Lens board for helicoid
- Helicoid mount
- Lens sensor cover
- LiDAR sensor cover / holder
- Viewfinder body
- Viewfinder cover
- Ground glass guide for calibration

I'd recommend printing with PETG or ASA - at least 18% Gyroid infill and 4 walls. You can download the files from Printables. If you're using OrcaSlicer - you can find a file there that has recommended slicer settings, orientation, supports, etc.

I've also included STEP files, so you can remix the design for use with other lenses or formats.

Electronics, optics & hardware

- Electronics
  - 1 x Adafruit Feather RP2040
  - 1 x Adafruit MiniBoost 5V @ 1A (this is to power the TF-LUNA, which requires 5v operating voltage)
  - 1 x TF-LUNA LiDAR sensor
  - 1 x Adafruit VCNL4040 Proximity and Lux Sensor
  - 1 x Adafruit BH1750 Light Sensor
  - 1 x Adafruit Monochrome 1.12" 128x128 OLED Graphic Display
  - 1 x 8mm Momentary Push Button Switch
  - 1 x 3-Position SPDT Slide Switch 10x5x5mm
  - 2 x 10k Ohm resistor
  - 2 x 100mm STEMMA QT cable
  - 1 x 400mm STEMMA QT cable
  - 1 x 3.7V 820mAh 653042 Lipo (30.5x44 x6.8mm) **IMPORTANT! The polarity of these batteries usually don't match the Feather - CHECK before connecting.**
- Optics
  - 1 x 30mmx30mm 70R/30T beam splitter
  - 1 x Plano Convex Lens 25mm x f50
  - 1 x Plano Concave Lens 25mm x f25

- Hardware
  - 1 x [M65 to M65 Mount 17mm-31mm Focusing Helicoid]
  - M3x6 & M3x4 heat-set inserts
  - M3x6 & M3x4 screws
  - M2x4 & M2x6 screws
  - [1/4" Female to 3/8" Male converter screw] for tripod mounting
  - [Cold shoe mounting kit]
  - Some [4mm bungee cord]

Wiring diagrams

TF-LUNA to Feather RP2040

Use a 4-pin JST connector between the LiDAR and Feather instead of soldering it directly to the board. You'll thank me later.

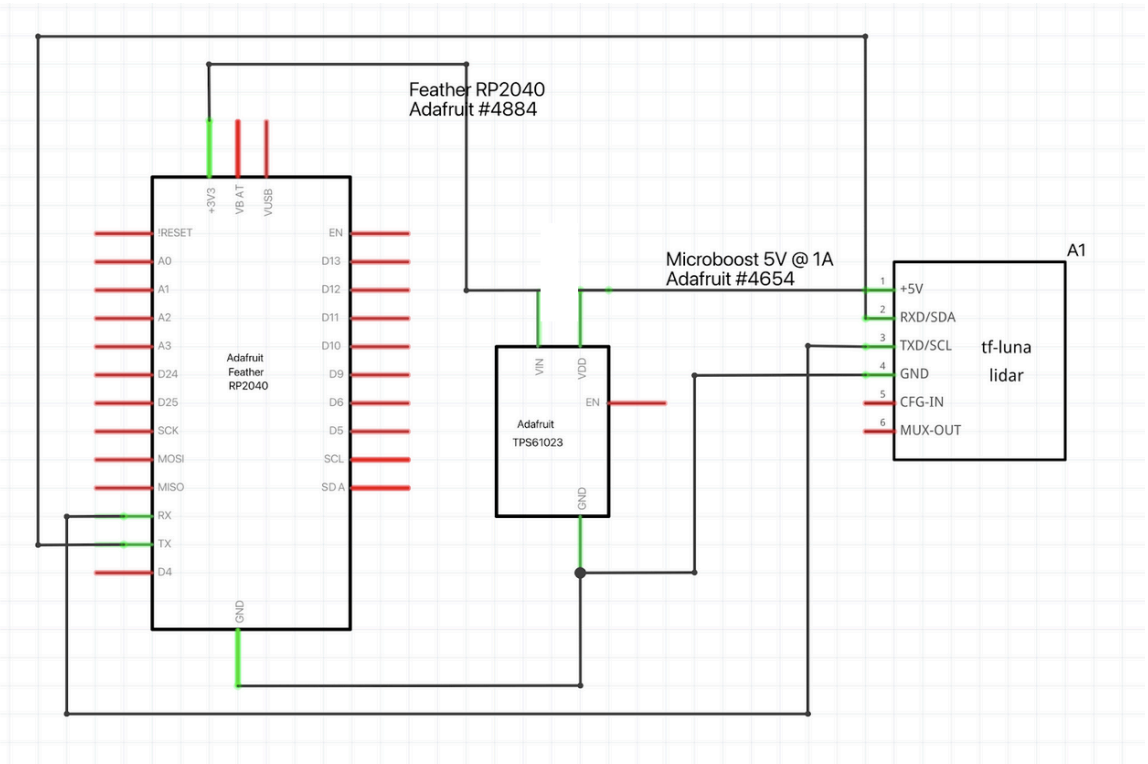

- FRP2040 3.3v out → TPS61023 VIN
- FRP2040 GND → TPS61023 GND
- TPS61023 VDD → TF-LUNA +5V IN
- TPS61023 GND → TF-LUNA GND
- FRP2040 TX → TF-LUNA RX
- FRP2040 RX → TF-LUNA TX

Button & Switch to Feather RP2040

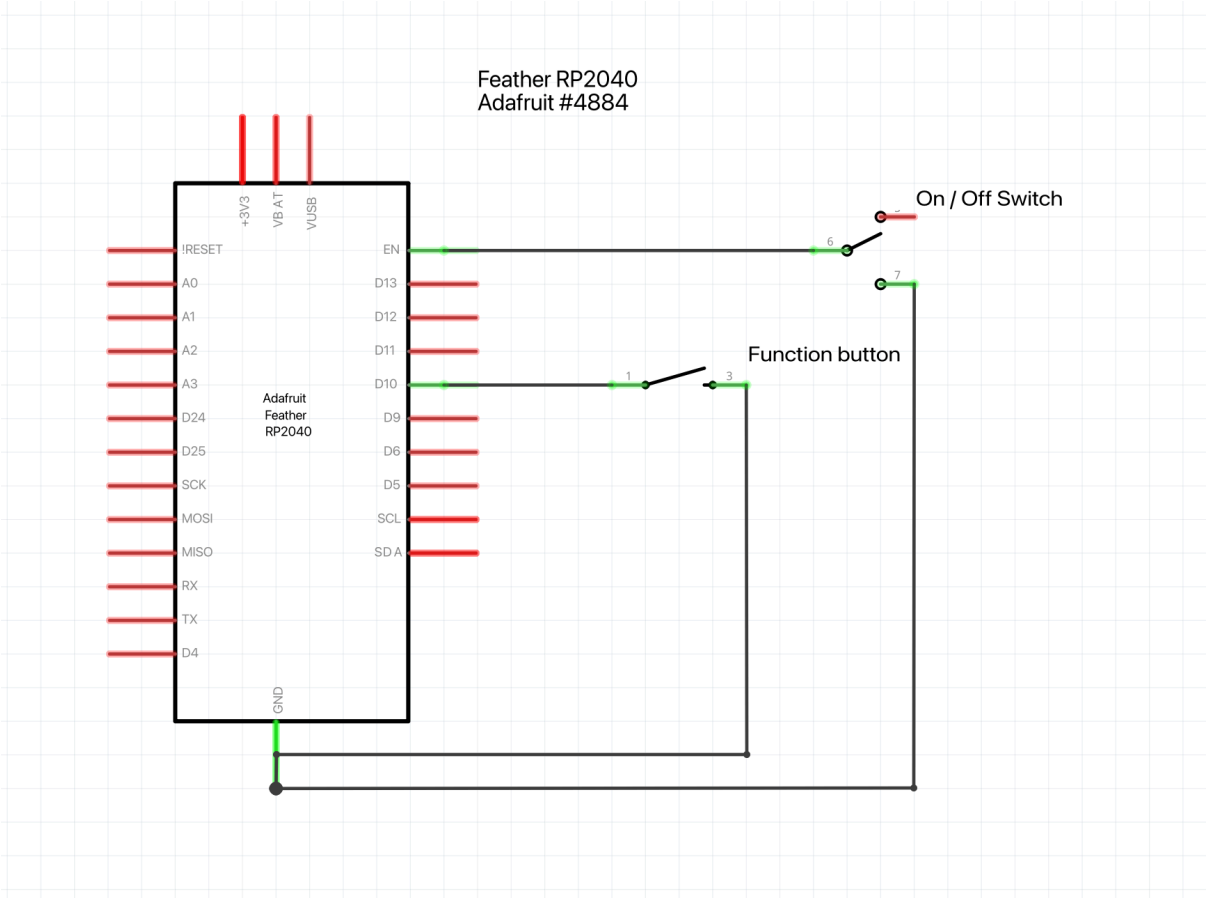

- On/Off switch center pin → EN (when EN is pulled to ground, the board is switched off)
- On/Off switch outer pin (either will work) → GND
- Momentary function button pin 1 → D10
- Momentary function button pin 2 → GND

Voltage Divider for battery monitoring to Feather RP2040

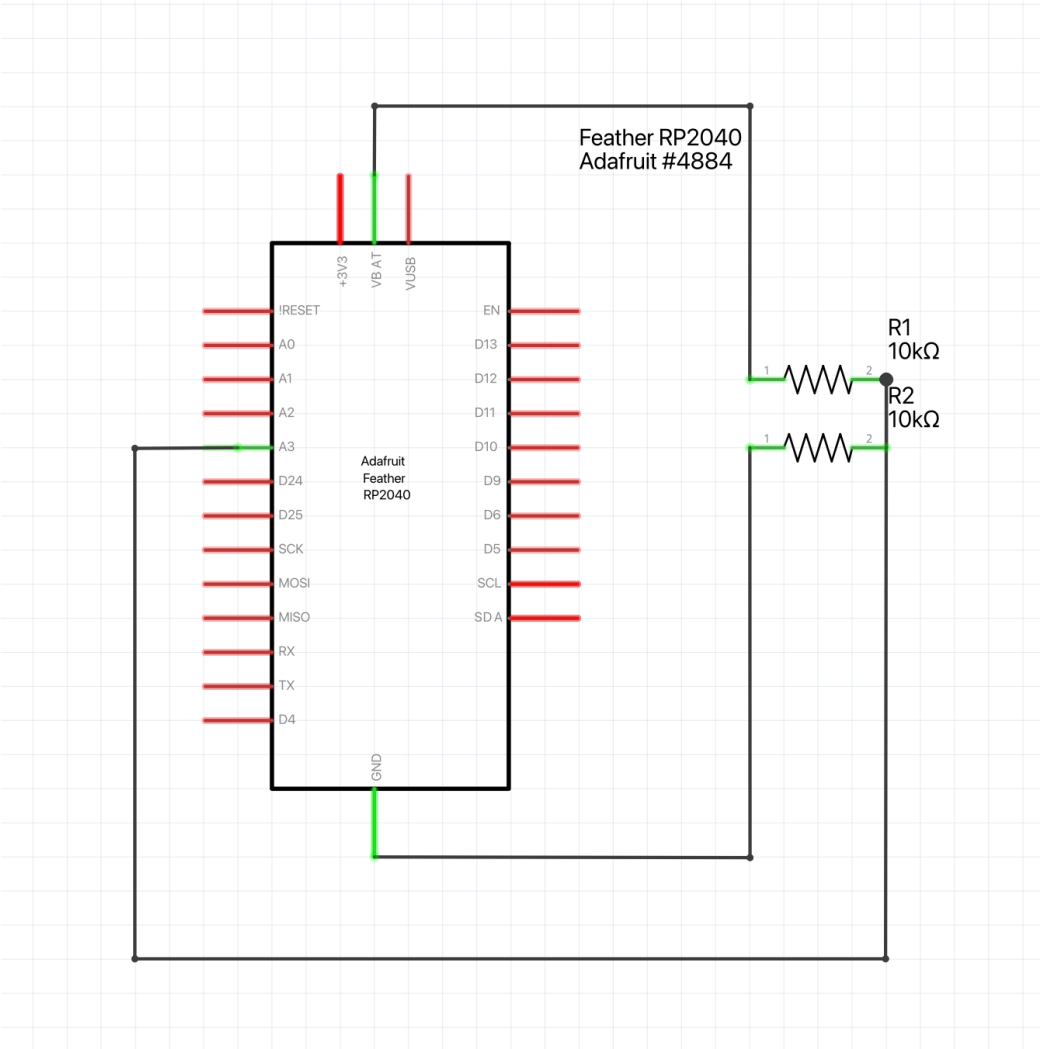

- Solder the two legs of the two 10k-ohm resistors together
- Soldered together legs → A3
- One resistor's leg → VBAT and the other resistor's leg → GND

STEMMA QT Components to Feather RP2040

These are easy and you can chain the components in any order that makes it easy for you, but this is how I connect mine:

Feather → OLED display → BH1750 Lux Sensor → VCNL4040 proximity sensor

Put it all together

1. Helicoid mount electronics

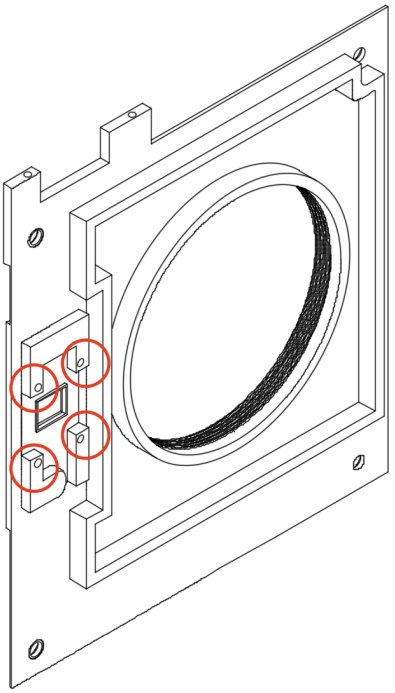

Connect the 400mm STEMMA QT cable to the VCNL4040 proximity sensor, and then affix the sensor with the sensor facing towards the helicoid mount, and the cable trailing out the bottom through the little slot.

Use four M2x4 screws. Screw them directly into the plastic.

2. Helicoid mount to body

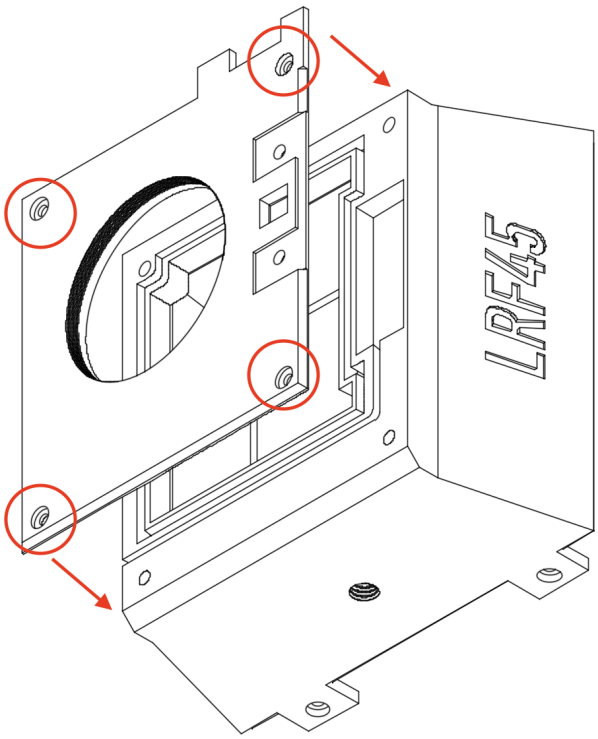

Use M3x4 heat-set inserts in the four positioning holes on the front of the camera body, as well as two M3x4 heat-set inserts in the positioning holes on the edge of the helicoid cover. Next, lay the cable into the channel into the body, from the sensor indentation to the side of the body.

After that, align and place the helicoid mount onto the body, seating it in the light trap grooves, taking care not to pinch the cable between the body and helicoid mount.

Finally, secure the helicoid mount to the body using four M3x4 screws.

3. Lens assembly

Before you do anything else, affix white tape to the bottom of the arm hanging off of the lens board. This is so that the sensor can effectively read lens position. It doesn't like dark plastics.

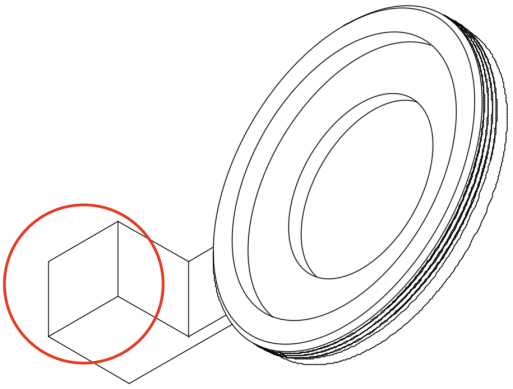

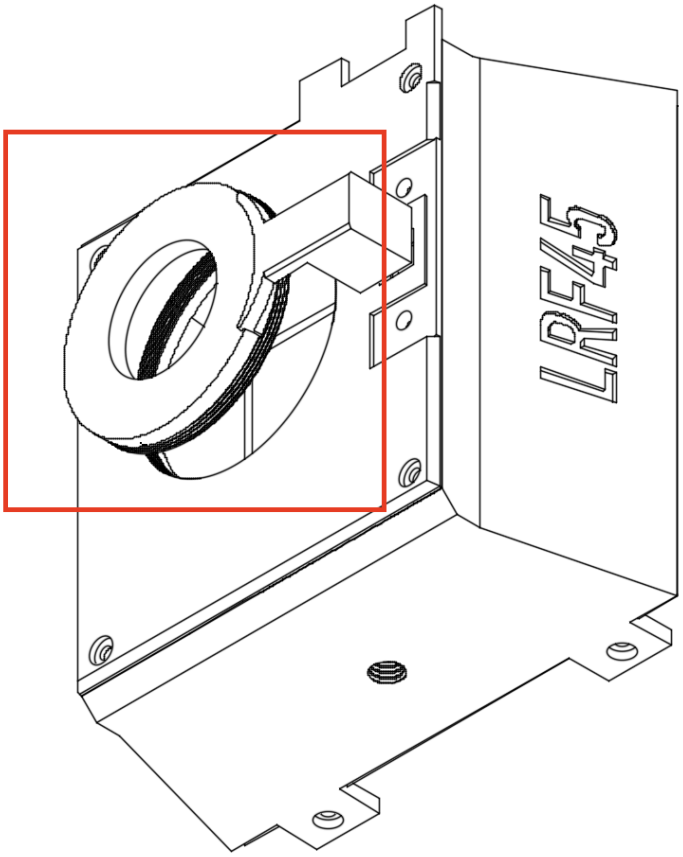

Affix the lens to the lens board just like you would on any other camera. Align the lens to your preference.

Then screw the lens board into the helicoid (not shown here), and the helicoid into the helicoid mount, making sure to align the arm over the sensor hole.

4. Sensor covers

You will need to screw the TF-LUNA sensor into the LiDAR cover first, using two M2x6 screws. The cable port should be on top.

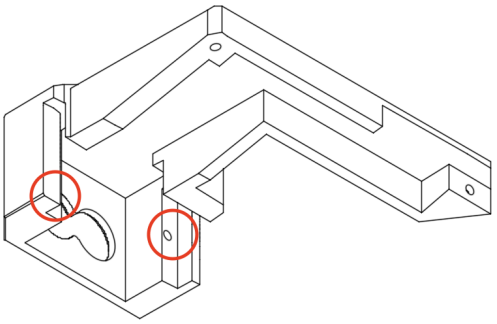

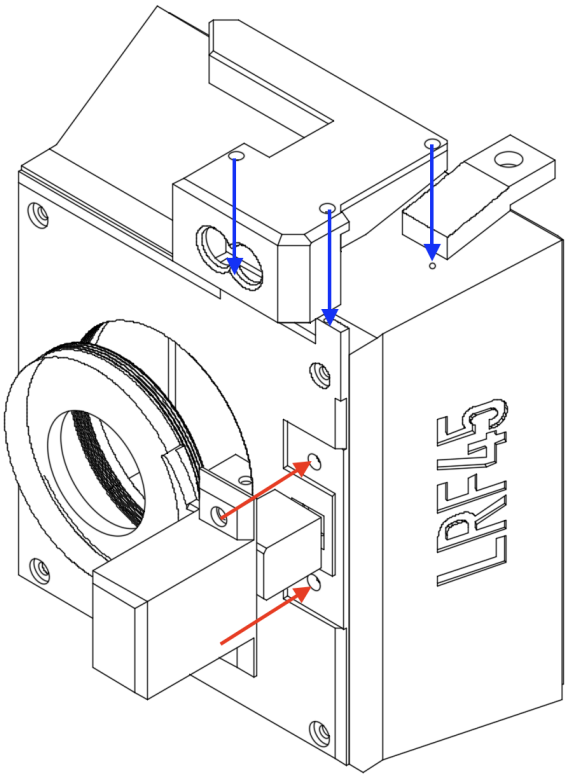

After that, lower the LiDAR sensor cover into place as shown, and affix it to the helicoid mount and body using three M2x4 screws.

Then, place the sensor cover over the arm and position it onto the helicoid cover as shown, affixing it with two M3x4 screws.

5. Back to body and trimmings

Before you affix the back to the body, you'll need to place M3x4 heat-set inserts into all the guide holes on the back. There should be three to affix the back to the body, three to affix the grip, and two to affix the elastic hook.

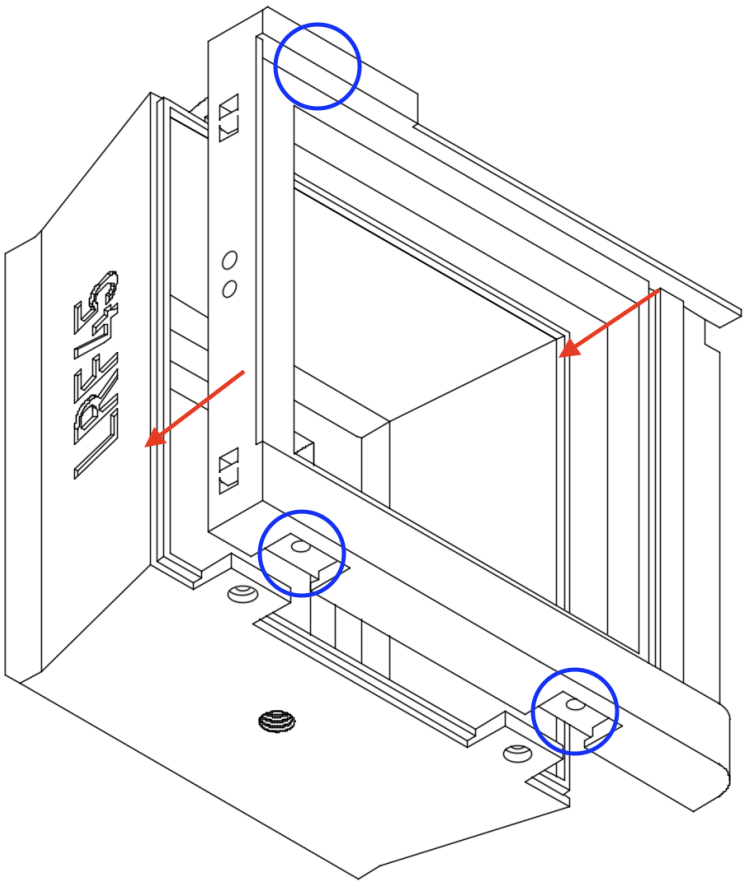

Now, align the back to the body, slotting it into the light trap. Then secure it in place with three M3x4 screws.

Also:

- Screw a 1/4" Female to 3/8" Male adapter for tripod mounting into the threaded hole on the bottom of the body
- Mount a cold shoe adapter with a ¼" screw top left of the back
- There are two mounting holes for a strap on the left side of the back - I use these with the Peak Design strap system

6. Rangefinder assembly

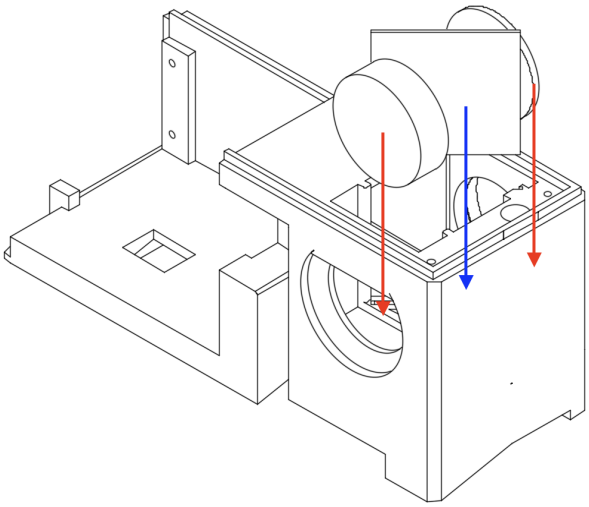

First you need to install all the optics as shown. The beam splitter goes in first, at a 45 degree angle, and fits securely into the slot. Next, install the PCX lens (the thinner one) with the convex side towards the beam splitter. After that, finish off the optics by slotting in the PCV lens, concave side towards the beam splitter.

Now, all the electronics on the rangefinder body need to be screwed into place using M2x4 screws.

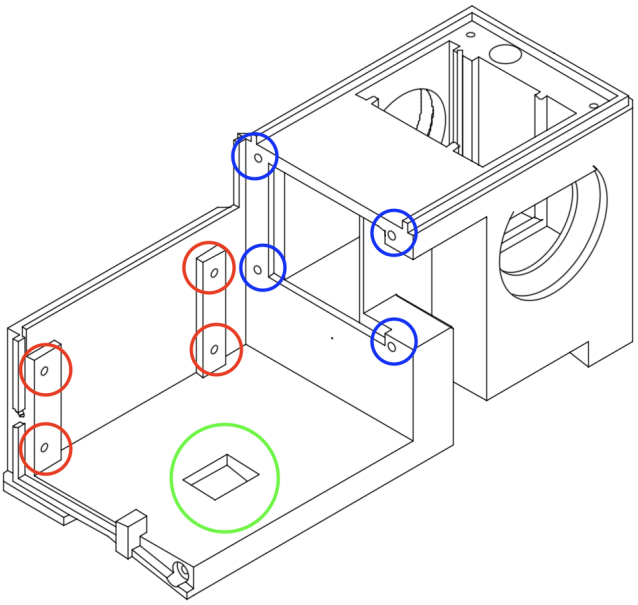

First the OLED display. Attach a 100mm STEMMA QT cable to each port. Align it with the display facing the optics and ribbon cable facing front and screw into place.

Plug the top 100mm STEMMA QT cable into the Feather's STEMMA QT port. Then align the Feather with the four screw holes at the rear of the case, with the USB port pointing away from the optics, and screw into place.

Now you need to thread the 400mm STEMMA QT cable through the hole in the base, but don't connect it to anything just yet. Attach two pieces of double-sided tape to each end of your LiPO battery, and stick it to the base of the case, making sure you can still adjust the length of the 400mm cable as needed.

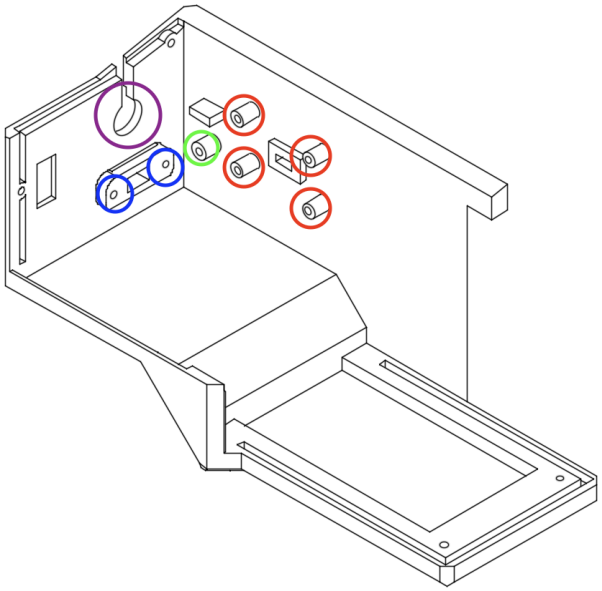

Move on to the rangefinder cover. All the electronics are screwed into place with M2x4 screws, just like the case. First screw the power switch into place. Then, screw the Miniboost into place.

Place the button in the relevant hole and fasten into place with the nut that came with it. Finally, the BH1750 lux sensor is screwed into place with the sensor pointing towards the hole in the cover - make sure you attach the 400mm STEMMA QT cable to one port, and the 100mm cable from the OLED display to the other before you do, as it's awkward plugging them in after screwing down.

Next, attach the viewfinder body to the 4x5 back as shown. There's a M3x4 screw that goes top down, and one on the side of the body (not marked in the sketch, but easy to see).

Once the body is attached, tuck the lead from the LiDAR sensor into the groove on the front of the body after plugging it into the Feather. Tuck away all the wires, place the rangefinder cover into place making sure it seats and aligns well, then screw it into place using M2x4 screws on the top.

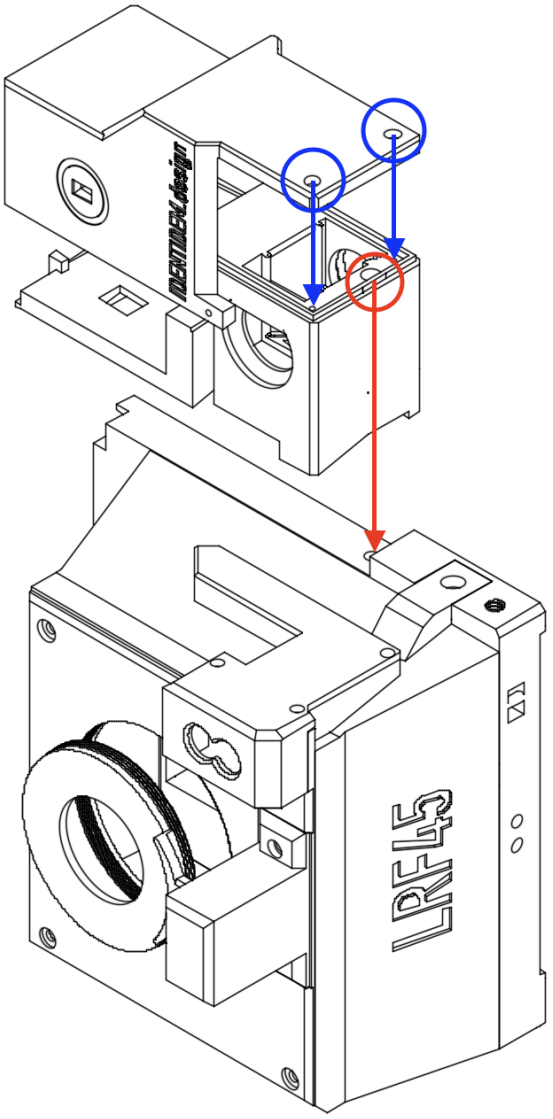

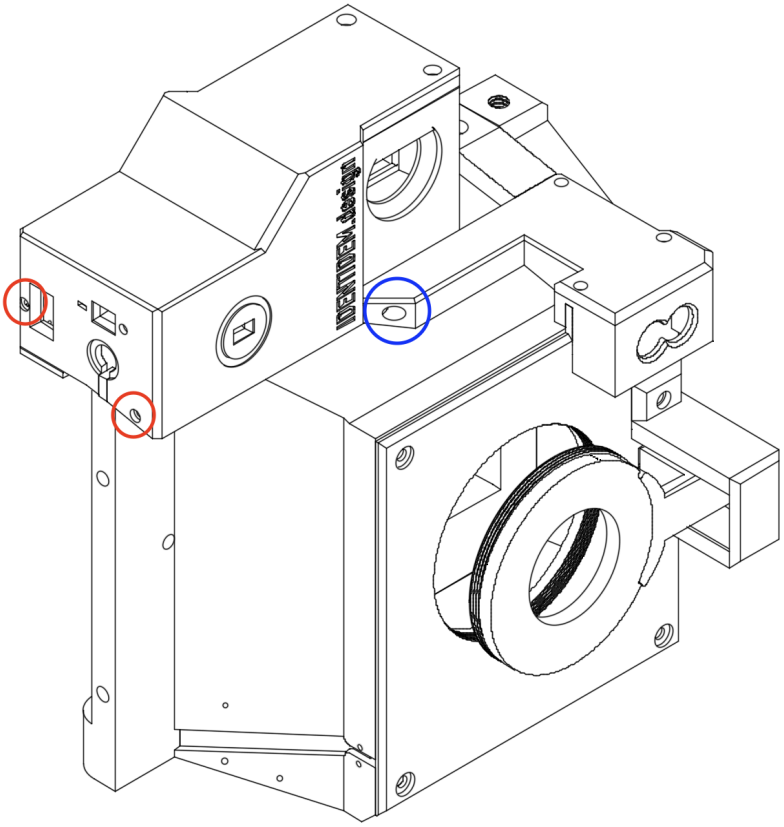

To finish off, using three M2x4 screws, fasten the cover on the side, and to the LiDAR sensor cover.

That's the trickiest (hardware) bit done!

7. Wire cover

Simply position the wire cover on the side of the body, tucking the cable into the channel, and screw into place with five M2x4 screws.

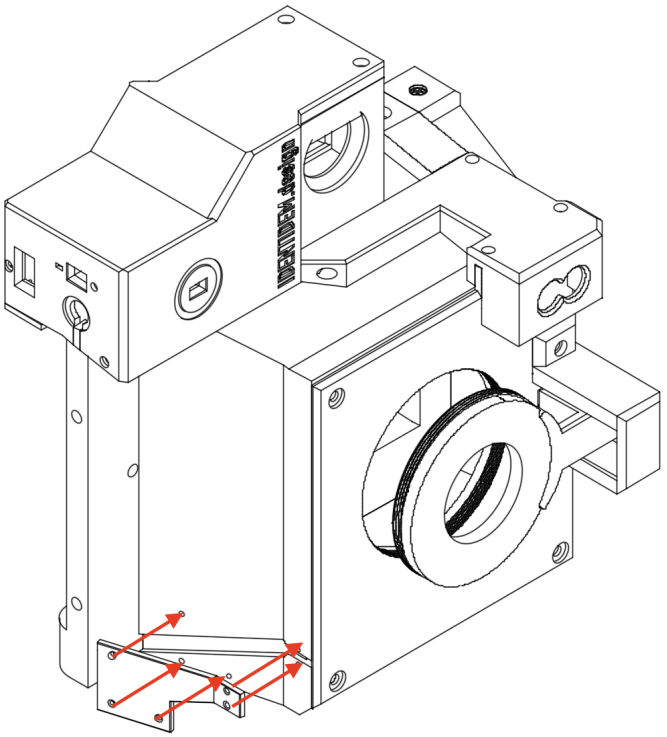

8. Grip

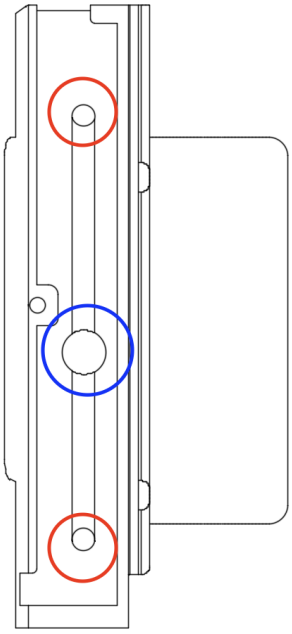

Thread the two ends of the elastic bungee cord through the holes in the handle and tie them together. There's a little indentation for the knot to lie in.

Position the handle so that it covers the cable going up to the rangefinder assembly, and affix it with a M3x4 screw on the front.

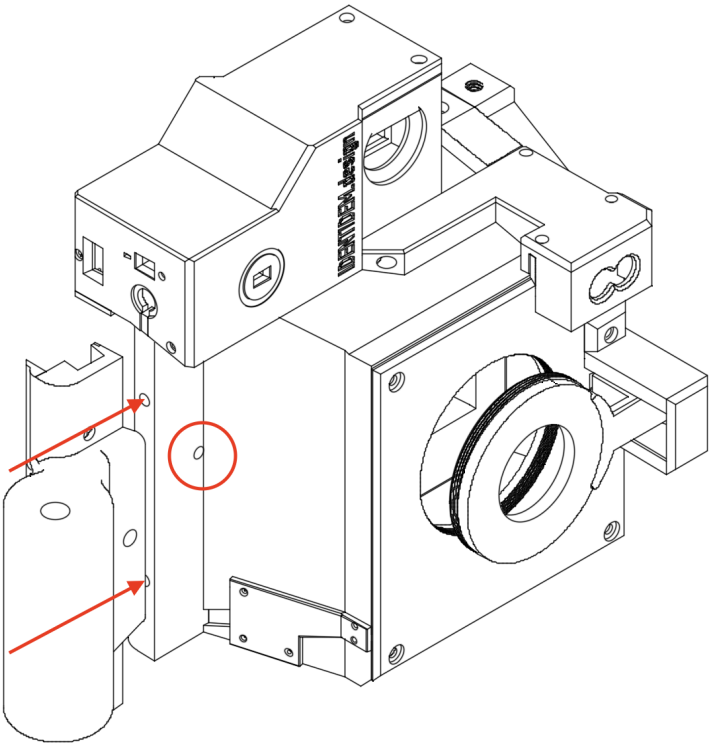

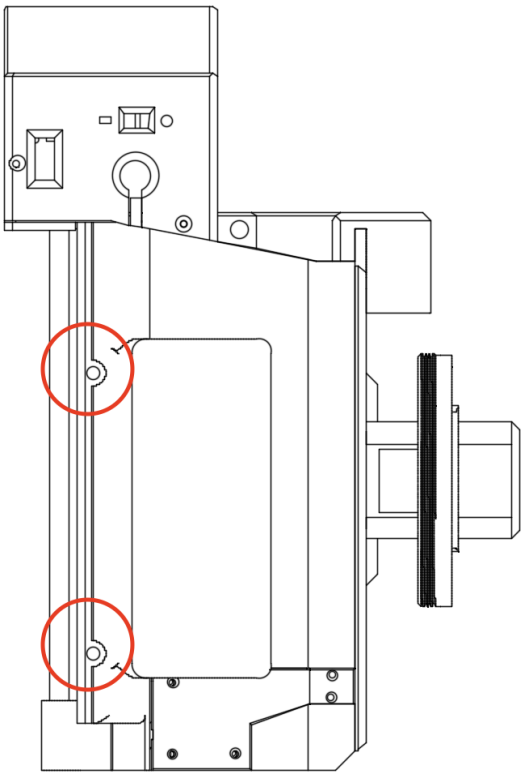

Next, two M3X4 screws go into the side to firmly affix the handle to the body. Take care not to screw them in too deep as this might crack the handle plastic. Small hairline cracks in the thinnest part of the plastic are fine, but ugly.

The handle has a hole to mount a shutter release cable. I would recommend using one.

9. Elastic hook

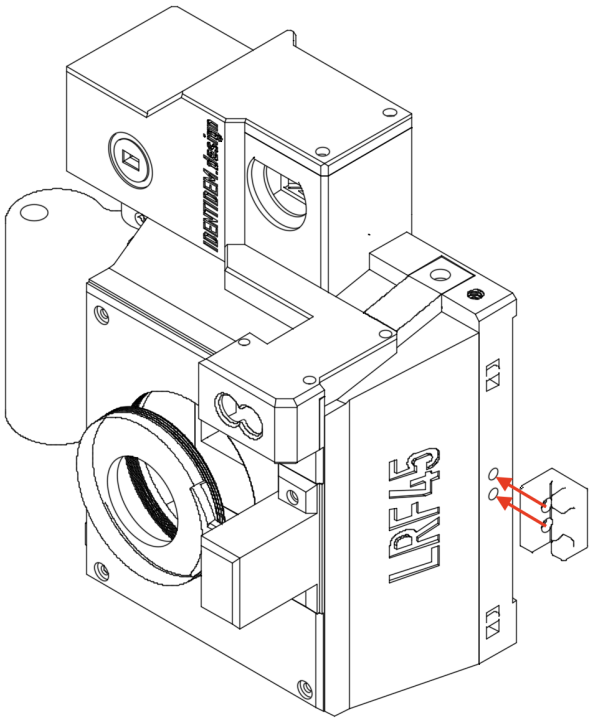

The last part of the assembly is screwing the hook for your elastic bungee cord into place.

Use two M3x4 screws to do so.

Source code and calibration

1. Before you start

You'll need to load up your Adafruit Feather RP2040 with Circuitpython. Connect to your computer with a USB-C cable. Make sure it's a data cable.

(This is also how you charge the battery, with a USB-C cable. You can also use a wall adapter or battery bank.)

Follow the instructions here.

After that, the following libraries will need to be copied to the **lib** folder on the Circuitpython drive:

- adafruit_bh1750
- adafruit_vcnl4040
- adafruit_tfmini
- adafruit_displayio_sh1107
- adafruit_display_text
- adafruit_display_shapes
- Asyncio

Next, copy the following files from the LRF45 source code repo to the root of the Circuitpython drive:

- cody.py
- boot.py
- config.json

2. Calibration

I use MJU to check serial output for debugging / calibration and pushing code to the Feather. By default `boot.py` sets the filesystem to read/write mode by the code - and this means you can't save changes to your code.

To be able to save changes, you need to rename that file from the console:

```
> import os
> os.rename("boot.py","boot.bak")
```

Unmount the drive, disconnect and reconnect the Feather from your computer, and you're good to go.

Once you're all done, simply rename it back to `boot.py`.

Light meter constants

In `code.py:62-63` you can add or remove ISOs and Apertures as desired for the light meter.

Rangefinder constants

The following values will need to be adjusted for your lens and helicoid. Sensor readings are from the lens sensor and because of the nature of 3D printing and plastic, your values may vary. If you want to use a longer focal length, you might need to modify the lensboard to move the lens further from the film plane. Shorter focal lengths will need quite a bit of modification of the body itself to move the lens closer to the film plane.

These are starting values for a **Fujinon-W 105mm f/5.6 lens in a 17-31mm M65 helicoid** in `code.py:75-82`:

```
CLOSE_FOCUS_CM = 85 # Close focus distance in cm
CLOSE_FOCUS = 68 # Close focus sensor reading
INF_FOCUS_CM = 560 # Infinity focus distance in cm
INF_FOCUS = 875 # Infinity focus sensor reading
```

How do you fine-tune these values? A little bit of leg-work is required.

USE A TRIPOD AND A FOCUS TARGET like https://www.squit.co.uk/photo/focuschart.html

1. Using ground glass positioned using the 3D-printed ground glass spacer, focus to the target at the closest focus distance, as well as infinity, with your lens wide open, and take note of the LiDAR reading where the target is in focus - see `code.py:388`
2. Take note of the lens sensor reading at the helicoid's minimum extension (infinity) and maximum extension (close focus)
3. Set `INF_FOCUS` and `CLOSE_FOCUS` to those values, respectively
4. Set `INF_FOCUS_CM` and `CLOSE_FOCUS_CM` to the distance in centimetres measured from LiDAR, respectively
5. Test your new values by checking focus at infinity and close focus, as well as a few points in between
6. Repeat until you get it right - tedious, but worth it once you dial it in!

To use the LRF45 with a Lomograflok you'll need to do the same with the Lomograflok attached to find the closest and furthest focus distance you can achieve with the helicoid. The nature of the design means you won't be able to achieve infinity focus without significant changes to the body, and the focus range is pretty small, and very close, but it makes for a great little instant portrait machine.

Once you have those distances, simply update `CLOSE_FOCUS_CM_LG` and `INF_FOCUS_CM_LG` in the code.

Long pressing the button for 10 seconds or more will switch between LG and Normal rangefinder modes.

Using the LRF45

1. Prepare

The LRF45 works with any Graflok-compatible back where the film plane is equal to a 4x5 film holder. To use this camera with the Lomograflok it needs to be calibrated specifically for that back, and put into Lomograflok mode.

Position your film holder or back like any other 4x5 camera and then hold it in place with the bungee cord, by pulling it across and hooking it in. Taking pictures works like any other camera: remove the darkslide, take a meter reading, set your aperture and shutter speed on the lens, cock your shutter, focus, and shoot! Remember to replace the dark slide.

2. User Interface

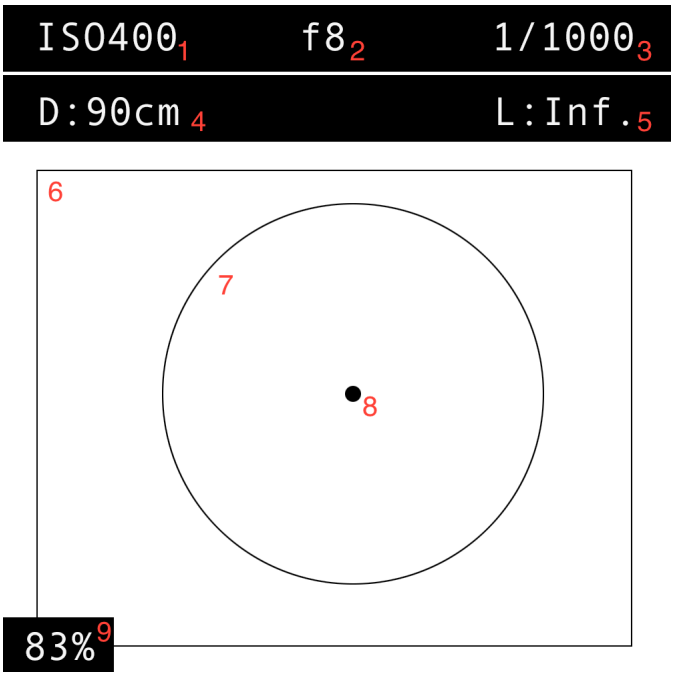

1. Selected ISO for lightmeter
2. Selected Aperture for lightmeter
3. Shutter speed value calculated from light meter, ISO and Aperture
4. Distance to object, measured by the LiDAR sensor
5. Lens focus distance
6. Frame lines
7. Focus accuracy indicator
8. Focus reticle (this is where the LiDAR beam is currently aimed)
9. Battery life indicator (estimate)

3. Using the rangefinder to focus

1. Look through the viewfinder and point the focus reticle at your subject
    a. Note that, because this is not true LiDAR, but an IR LED focused by a lens, as your subject moves further away from the camera, the point of focus will both move slightly up and to the right, as well as diffuse a little - as such you will see the focus reticle move as you point at different distances to account for this
2. (Left image below) Turn the helicoid in the relevant direction to focus on your subject, keeping an eye on
    a. The focus indicator circle around the focus reticle - this will converge as you approach focus
    b. The distance measured by the LiDAR
    c. The lens focus distance
3. (Right image below) When the focus indicator converges to a point, also check your distance measurement and focus distance, to make sure they are as close as possible
4. Also sanity check the distance measurement to your subject, if it's too close or too far, slightly move the camera / focus reticle until it seems right
5. Once everything lines up, your subject is in focus, and you can take your photo!

You might also notice the frame lines shrink as you focus from infinity to close focus. This is an estimated parallax correction, but pretty good for 4x5!

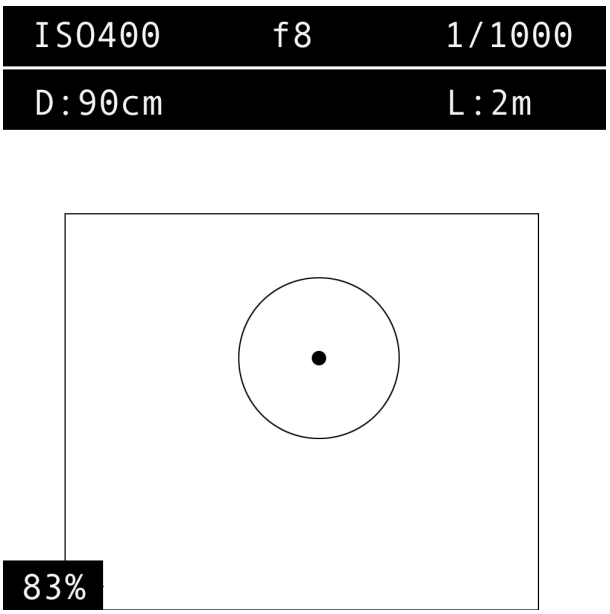

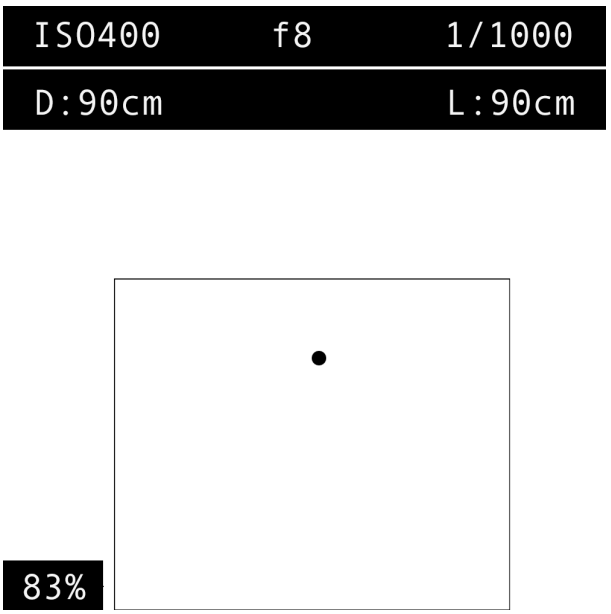

4. Using the lightmeter

The lightmeter uses a lux sensor that returns a continuous reading of a weighted average of the scene you're shooting. It's mostly good enough, but use an external meter if you want more accuracy.

- **One (short) button press**
    - Cycle through Apertures
- **Button press more than 5 seconds, less than 10**
    - Cycle through ISOs
- **Button press more than 10 seconds**
    - Switch between Normal and Lomograflok modes
    - Lens distance will read **L: 1m** in normal mode, **LG: 1m** in Lomograflok mode

5. Quirks and advice

At all times remember that this is a camera that was designed and built by one person, and that this person is a hobbyist with no formal background in anything but software development. In addition, this is a mostly 3D-printed camera. Printers differ, as does material. Plastic contracts as it cools. That means that this is not a 100% accurate machine and you **have** to put in the effort to properly calibrate your own camera.

With that out of the way - it's a great camera to shoot with and does a pretty good job. Being able to shoot 4x5 handheld with a rangefinder is a pretty surreal experience.

So here are **the quirks, and some advice**:

- Use a dark, matte material to print the body, back, and helicoid mount - barring that, you will need to flock the inside of the camera to prevent internal reflections
- Like I mentioned, the TF-Luna is *not true LiDAR*
    - it's not pinpoint accurate, so be vigilant and realistic when acquiring distance to subject - you might need to move the reticle around ever so slightly to nail it
    - It can't measure past glass, so no focusing through windows
    - It really, really doesn't like super reflective surfaces, so don't expect accuracy when aiming at mirrors, shiny surfaces, or liquids
    - Maximum focus distance is 8 metres, but realistically most lenses have a hyperfocal distance well below that, so this doesn't really matter
- 105mm is the ideal focal length for this form factor
    - I've tried a 90mm, as well as a 135mm and both just didn't feel right or give me the results I wanted with the helicoid I am using
    - It's relatively cheap compared to other focal lengths, especially when you look for the Fujinon-W series - I picked up mine for £150
- Because of the Graflok compatible back, this is actually a multi-format camera, and I've used it with: 4x5 film double film holders, a 4x5 Grafmatic, a 6x9 roll film back, a Fuji FP100c back - and the Lomograflok!

The future

This is a nice little platform, and the source code and UI have lots of room for improvement.

Some things I have planned:

- Being able to add and switch between frame lines depending on the format you're shooting
- Adding support for an optional 6-DoF sensor to add a level and horizon indicator to the viewfinder

However, this project is open source, and I would love to see others remix, add to, improve, or adapt the work I've put in. If you do, please drop me an email to hello@identidem.design, showing me what you've done!

Enjoy using this camera, I've put a lot of time and effort into it! :)

- Albert