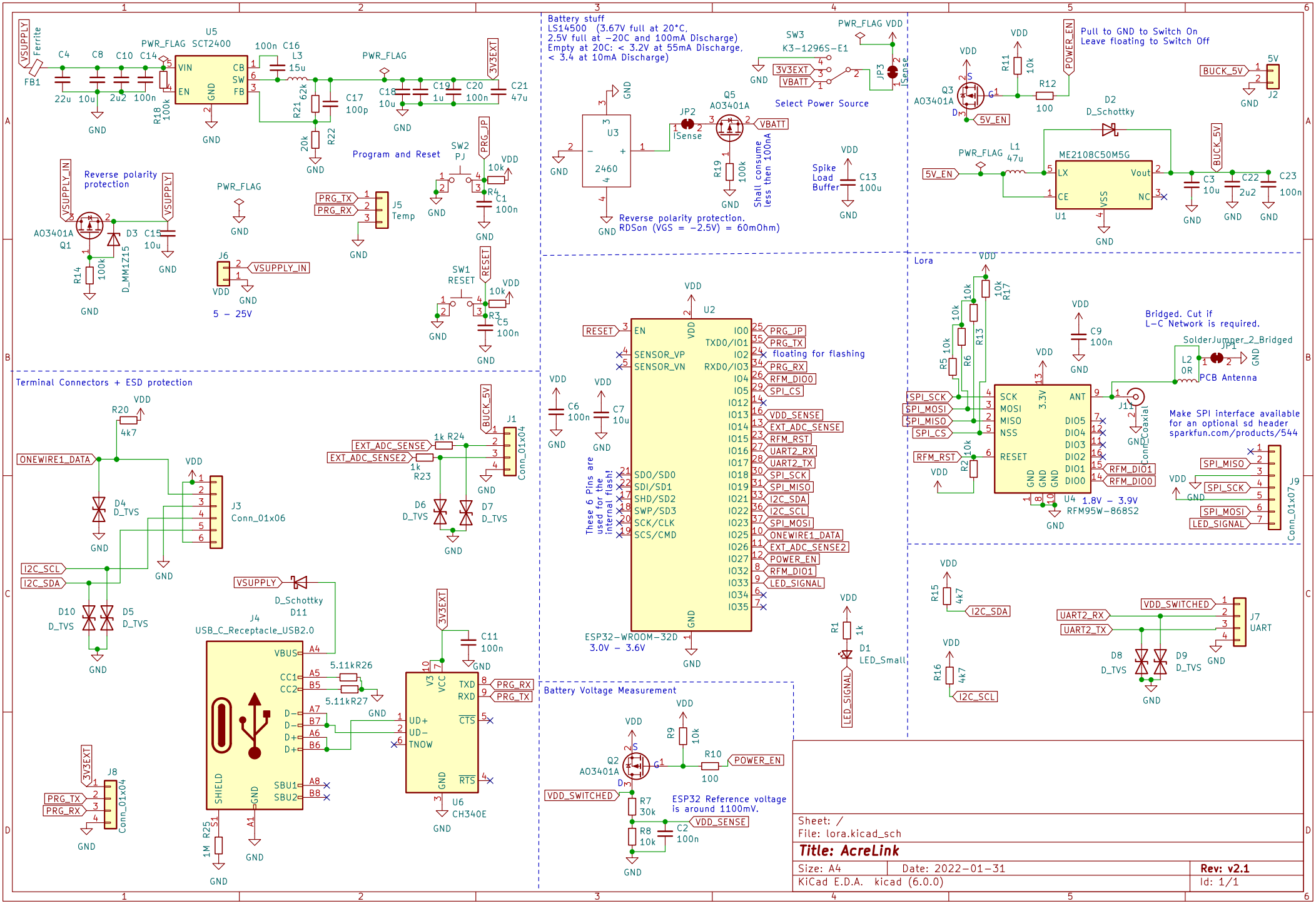
U5 SCT2400
VIN EN CB SW FB GND
VSUPPLY Ferrite FB1
C4 22u C8 10u C10 2u2 C14 100n
PWR_FLAG
R18 100k
100n C16
L3 15u
R21 62k
R22 20k
C17 100p
C18 10u C19 1u C20 100n C21 47u
3V3EXT
Reverse polarity protection
VSUPPLY_IN
VSUPPLY
Q1 AO3401A
D3 D_MM1Z15
R14 100k
C15 10u
J6
5 – 25V
Program and Reset
SW2 PJ
PRG_JP
R4 10k
C1 100n
PRG_TX
PRG_RX
J5 Temp
SW1 RESET
R3 10k
C5 100n
Battery stuff
LS14500 (3.67V full at 20°C,
2.5V full at −20C and 100mA Discharge)
Empty at 20C: < 3.2V at 55mA Discharge,
< 3.4 at 10mA Discharge)
U3 2460
JP2 ISense
Q5 AO3401A
VBATT
R19 100k
Shall consume less then 100nA
Reverse polarity protection.
RDSon (VGS = −2.5V) = 60mOhm)
SW3 K3-1296S-E1
3V3EXT VBATT
JP3 Sense
Select Power Source
Spike Load Buffer
C13 100u
Pull to GND to Switch On
Leave floating to Switch On
POWER_EN
R11 10k
R12 100
Q3 AO3401A
5V_EN
D2 D_Schottky
L1 47u
ME2108C50M5G
LX CE Vout VSS NC
U1
C3 10u C22 2u2 C23 100n
BUCK_5V
5V J2
Terminal Connectors + ESD protection
R20 4k7
ONEWIRE1_DATA
D4 D_TVS
J3 Conn_01x06
I2C_SCL
I2C_SDA
D10 D_TVS
D5 D_TVS
EXT_ADC_SENSE
EXT_ADC_SENSE2
1k R24
1k R23
J1 Conn_01x04
D6 D_TVS
D7 D_TVS
VSUPPLY
D_Schottky D11
J4 USB_C_Receptacle_USB2.0
VBUS CC1 CC2 D− D− D+ D+ SHIELD GND SBU1 SBU2
5.11kR26
5.11kR27
1M R25
C11 100n
U6 CH340E
V3 VCC TXD RXD UD+ UD− TNOW CTS RTS
J8 Conn_01x04
U2
EN SENSOR_VP SENSOR_VN SDO/SD0 SDI/SD1 SHD/SD2 SWP/SD3 SCK/CLK SCS/CMD
IO0 TXD0/IO1 IO2 RXD0/IO3 IO4 IO5 IO12 IO13 IO14 IO15 IO16 IO17 IO18 IO19 IO21 IO22 IO23 IO25 IO26 IO27 IO32 IO33 IO34 IO35
floating for flashing
These 6 Pins are used for the internal flash!
ESP32-WROOM-32D
3.0V – 3.6V
C6 100n C7 10u
R1 1k D1 LED_Small
Battery Voltage Measurement
Q2 AO3401A
R9 10k R10 100
VDD_SWITCHED
R7 30k R8 10k C2 100n
ESP32 Reference voltage is around 1100mV.
VDD_SENSE
Lora
R17 10k R13 10k R6 10k R5 10k
C9 100n
SCK MOSI MISO NSS RESET 3.3V ANT DIO5 DIO4 DIO3 DIO2 DIO1 DIO0 GND
U4 1.8V – 3.9V
RFM95W-868S2
RFM_RST R2 10k
Bridged. Cut if L-C Network is required.
SolderJumper_2_Bridged JP1
L2 0R
PCB Antenna
J11 Conn_Coaxial
Make SPI interface available for an optional sd header sparkfun.com/products/544
J9 Conn_01x07
LED_SIGNAL
R15 4k7 R16 4k7
J7 UART
UART2_RX UART2_TX
D8 D_TVS D9 D_TVS
Sheet: /
File: lora.kicad_sch
Title: AcreLink
Size: A4
Date: 2022-01-31
Rev: v2.1
KiCad E.D.A. kicad (6.0.0)
Id: 1/1