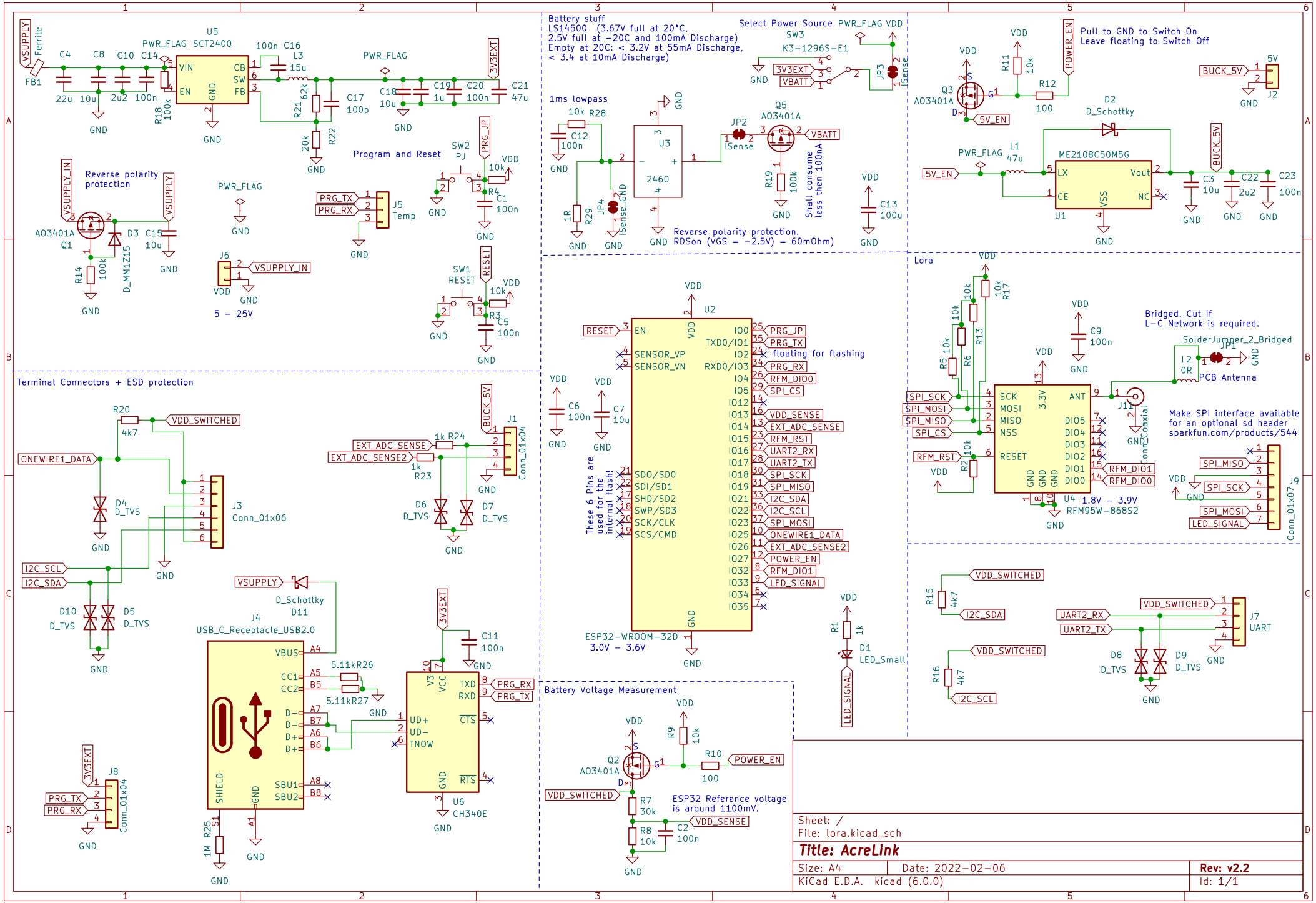
Battery stuff
LS14500 (3.67V full at 20°C,
2.5V full at −20C and 100mA Discharge)
Empty at 20C: < 3.2V at 55mA Discharge,
< 3.4 at 10mA Discharge)
Select Power Source
Pull to GND to Switch On
Leave floating to Switch Off
Reverse polarity protection
Program and Reset
1ms lowpass
Reverse polarity protection.
RDSon (VGS = −2.5V) = 60mOhm)
Shall consume less then 100nA
Lora
Bridged. Cut if
L−C Network is required.
PCB Antenna
Make SPI interface available
for an optional sd header
sparkfun.com/products/544
floating for flashing
These 6 Pins are
used for the
internal flash!
ESP32−WROOM−32D
3.0V − 3.6V
1.8V − 3.9V
RFM95W−868S2
5 − 25V
Terminal Connectors + ESD protection
USB_C_Receptacle_USB2.0
Battery Voltage Measurement
ESP32 Reference voltage
is around 1100mV.
Sheet: /
File: lora.kicad_sch
Title: AcreLink
Size: A4
Date: 2022−02−06
Rev: v2.2
KiCad E.D.A. kicad (6.0.0)
Id: 1/1