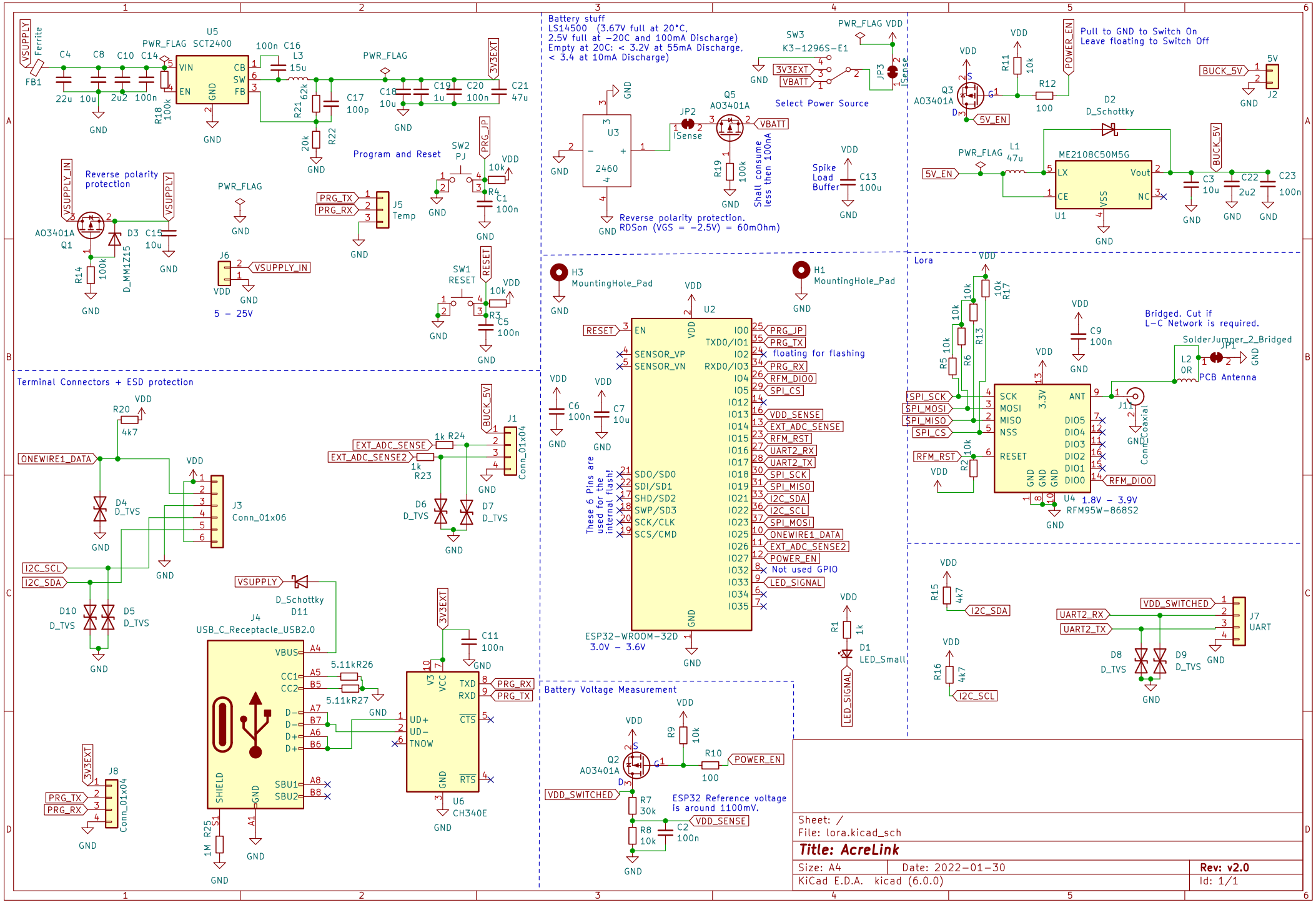
Battery stuff
LS14500 (3.67V full at 20°C,
2.5V full at −20C and 100mA Discharge)
Empty at 20C: < 3.2V at 55mA Discharge,
< 3.4 at 10mA Discharge)
Select Power Source
Reverse polarity protection.
RDSon (VGS = −2.5V) = 60mOhm)
Shall consume less then 100nA
Spike Load Buffer
Pull to GND to Switch On
Leave floating to Switch Off
Program and Reset
Reverse polarity protection
5 – 25V
Lora
Bridged. Cut if
L-C Network is required.
PCB Antenna
floating for flashing
These 6 Pins are used for the internal flash!
Not used GPIO
ESP32-WROOM-32D
3.0V – 3.6V
1.8V – 3.9V
RFM95W-868S2
Terminal Connectors + ESD protection
Battery Voltage Measurement
ESP32 Reference voltage is around 1100mV.
Sheet: /
File: lora.kicad_sch
Title: AcreLink
Size: A4
Date: 2022-01-30
Rev: v2.0
KiCad E.D.A. kicad (6.0.0)
Id: 1/1