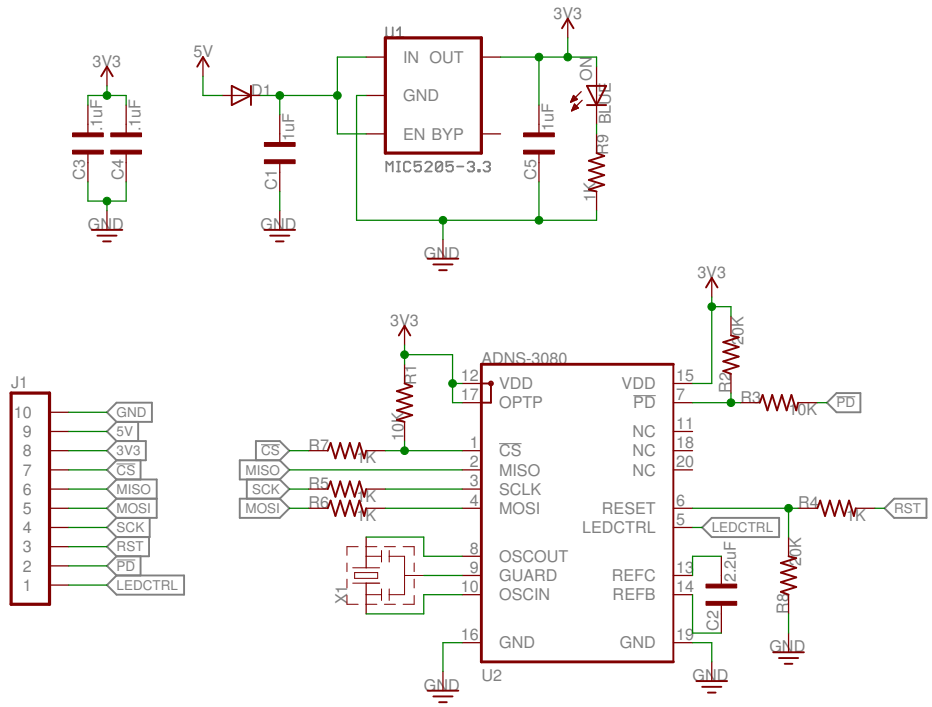

TITLE: ai_breakout_adns3080	
AUTHOR: A.I. HARDWARE SITH LORDS	REV: 1.0
DATE: 10/12/13 12:51 AM	SHEET: 1/1