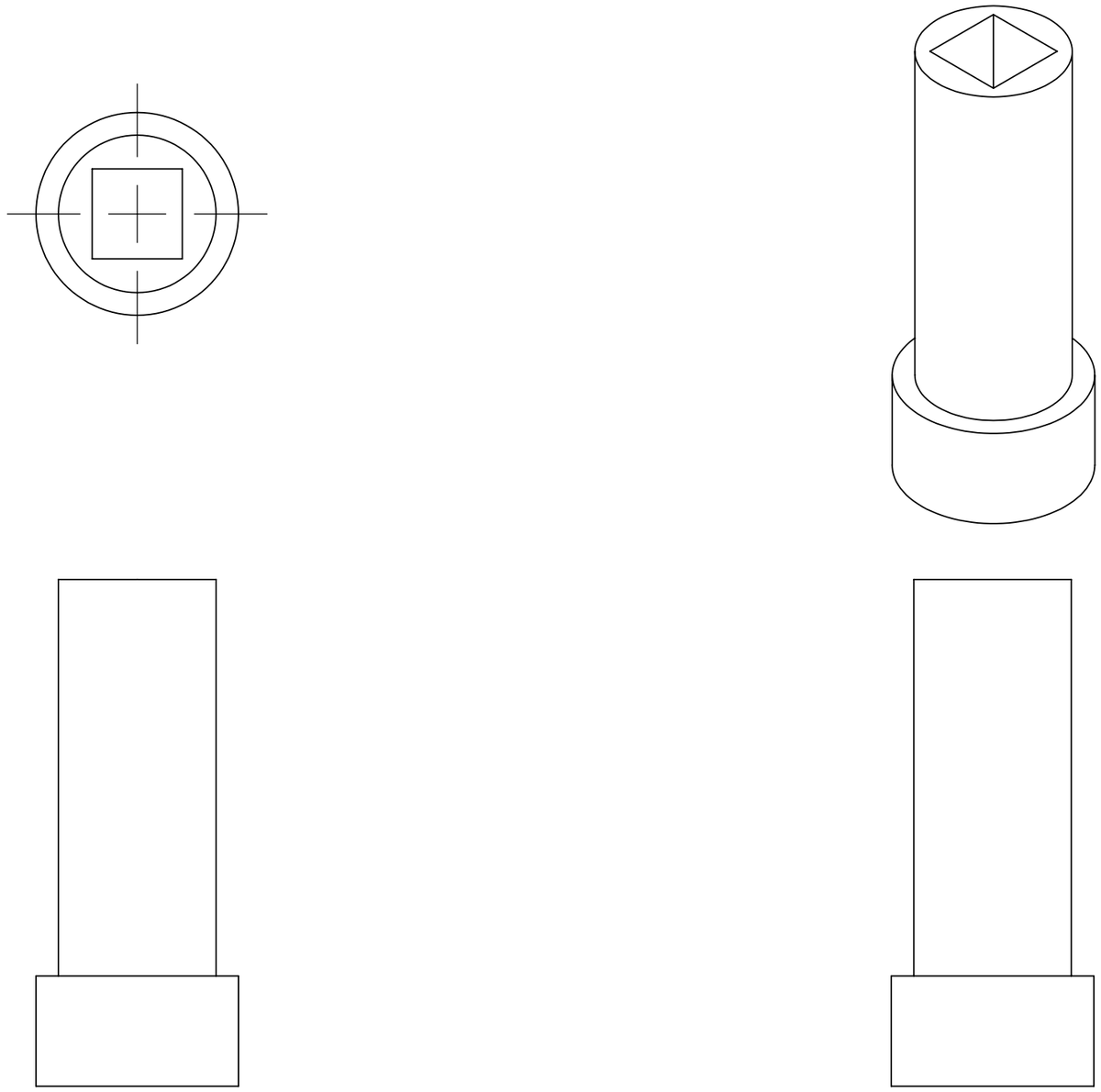

UNLESS OTHERWISE SPECIFIED: DIMENSIONS ARE IN MILLIMETERS SURFACE FINISH: TOLERANCES: LINEAR: ANGULAR:	FINISH:				DEBURR AND BREAK SHARP EDGES	DO NOT SCALE DRAWING	REVISION
	NAME	SIGNATURE	DATE			TITLE:	
DRAWN						Lifting Arm Axle	
CHK'D							
APPV'D							
MFG							
Q.A				MATERIAL:		DWG NO.	A3
				WEIGHT:		SCALE:2:1	SHEET 1 OF 1