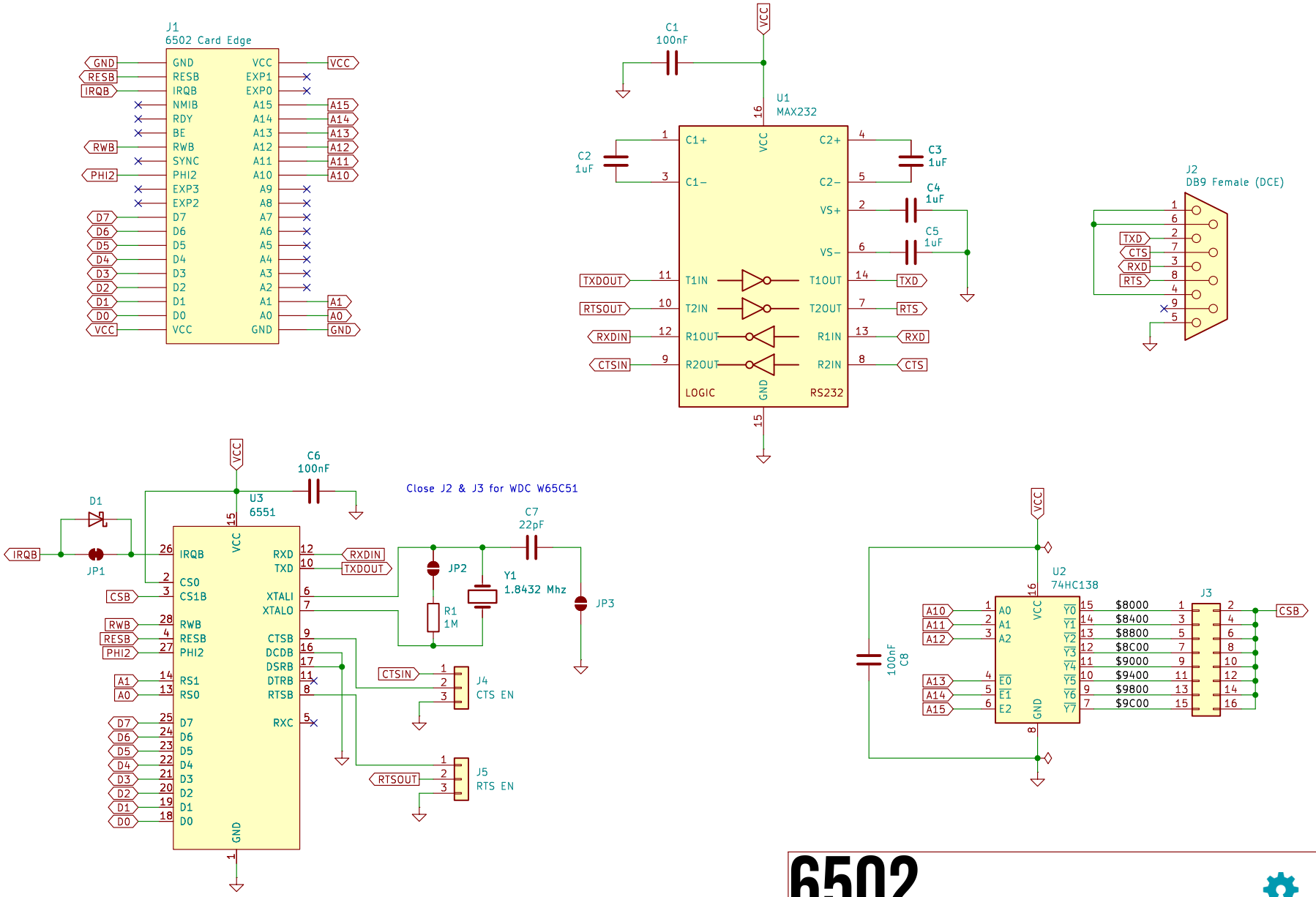

6502

A.C. Wright Design

Sheet: /

File: Serial Card.kicad_sch

Title: 6502 Serial Card

Size: USLetter	Date: 2025-09-21	**Rev: 1.0**
KiCad E.D.A. 9.0.4		Id: 1/1