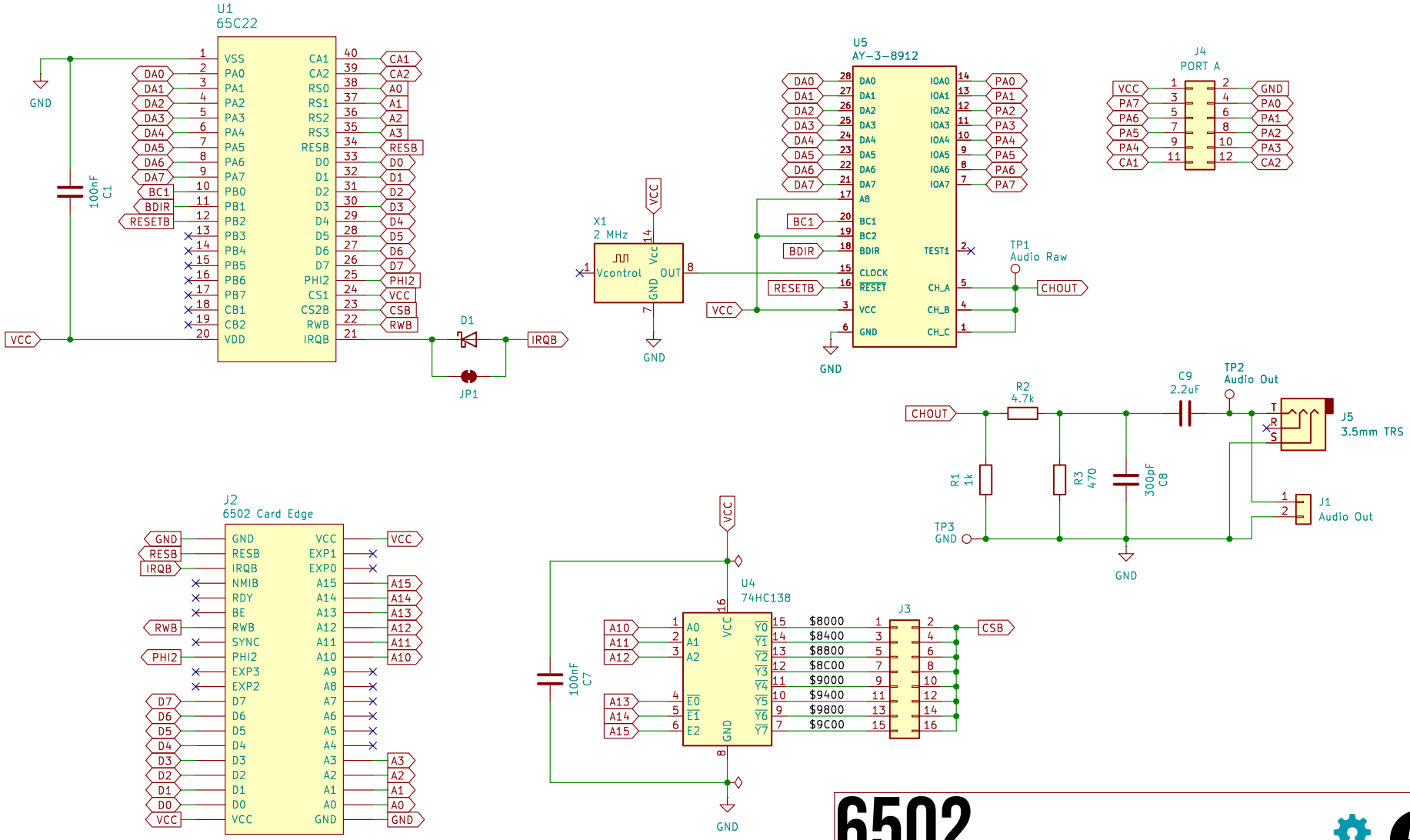

6502

A.C. Wright Design

Sheet: /

File: Sound Card.kicad_sch

Title: 6502 Sound Card

Size: USLetter	Date: 2024-06-12	**Rev: 1.0**
KiCad E.D.A. 8.0.3		Id: 1/1