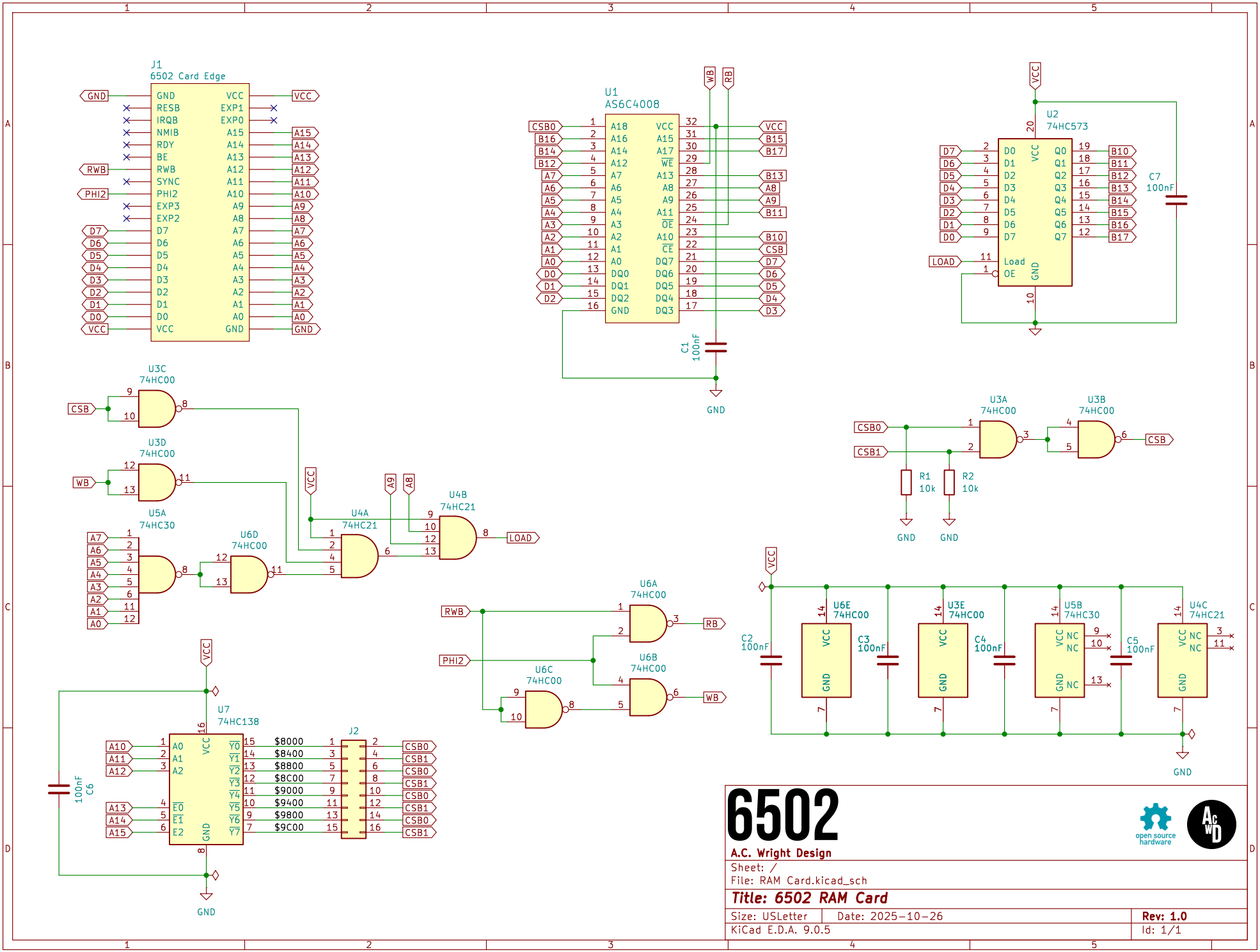
J1
6502 Card Edge
U1
AS6C4008
U2
74HC573
C7
100nF
C1
100nF
U3C
74HC00
U3D
74HC00
U5A
74HC30
U6D
74HC00
U4A
74HC21
U4B
74HC21
U3A
74HC00
U3B
74HC00
R1
10k
R2
10k
U6A
74HC00
U6B
74HC00
U6C
74HC00
U6E
74HC00
U3E
74HC00
U5B
74HC30
U4C
74HC21
C2
100nF
C3
100nF
C4
100nF
C5
100nF
U7
74HC138
J2
C6
100nF
$8000
$8400
$8800
$8C00
$9000
$9400
$9800
$9C00
6502
A.C. Wright Design
Sheet: /
File: RAM Card.kicad_sch
Title: 6502 RAM Card
Size: USLetter
Date: 2025-10-26
Rev: 1.0
KiCad E.D.A. 9.0.5
Id: 1/1