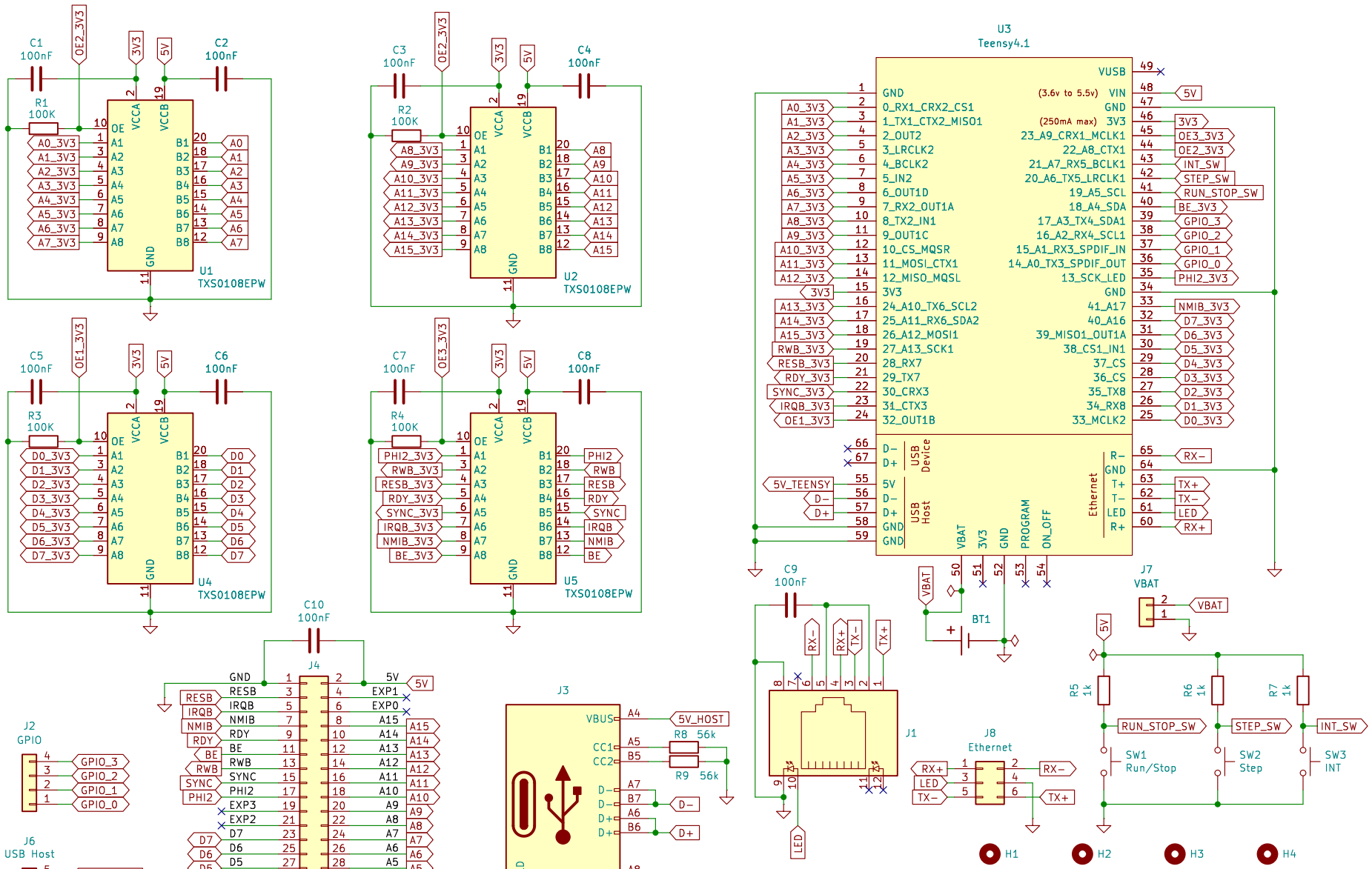

6502

A.C. Wright Design

Sheet: /

File: Dev Board.kicad_sch

Title: 6502 Dev Board

Size: USLetter	Date: 2024-04-22	**Rev: 1.0**
KiCad E.D.A. 8.0.1		Id: 1/1