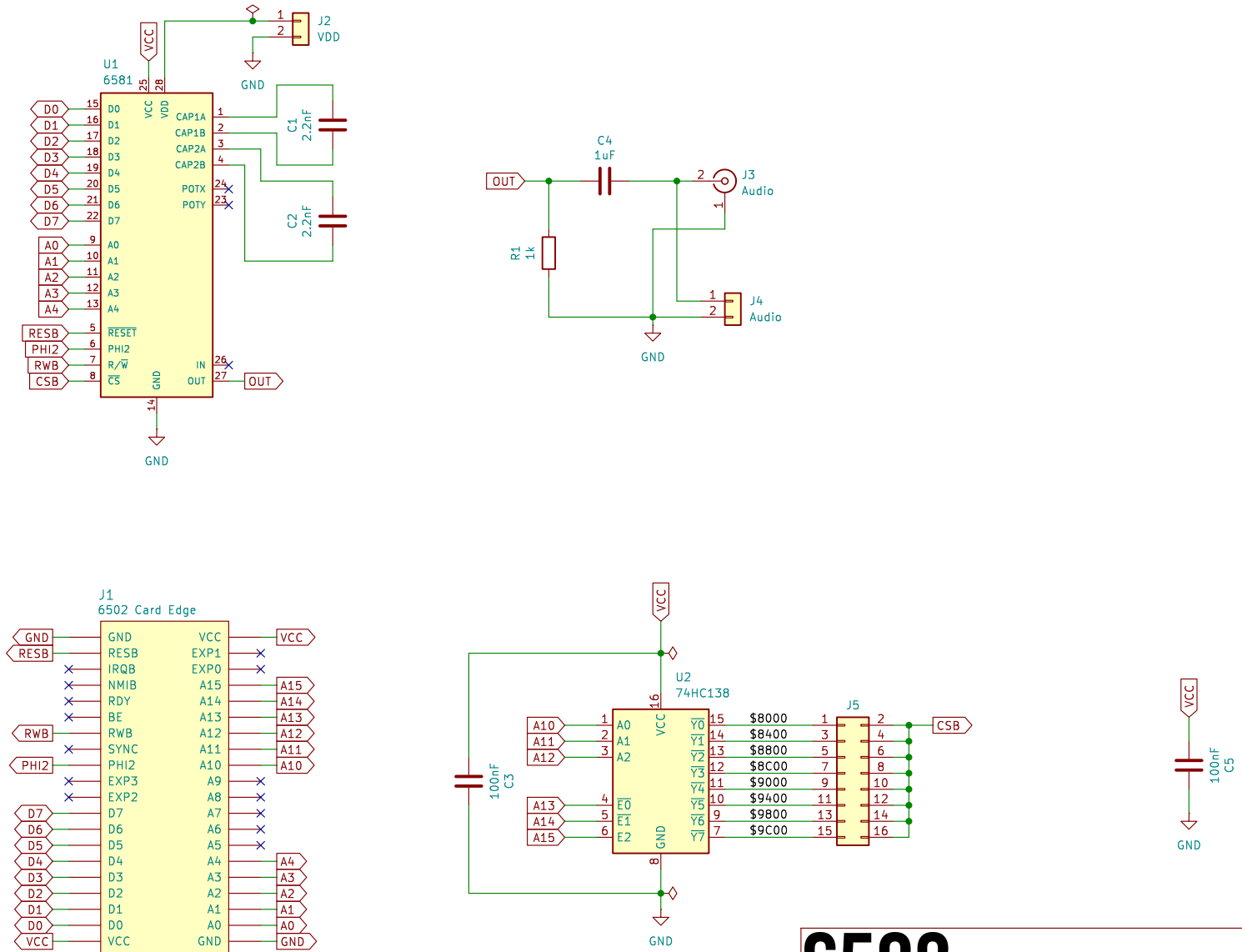

6502

A.C. Wright Design

Sheet: /

File: Sound Card.kicad_sch

Title: 6502 Sound Card

Size: USLetter	Date: 2026-01-11	**Rev: 1.0**
KiCad E.D.A. 9.0.6		Id: 1/1