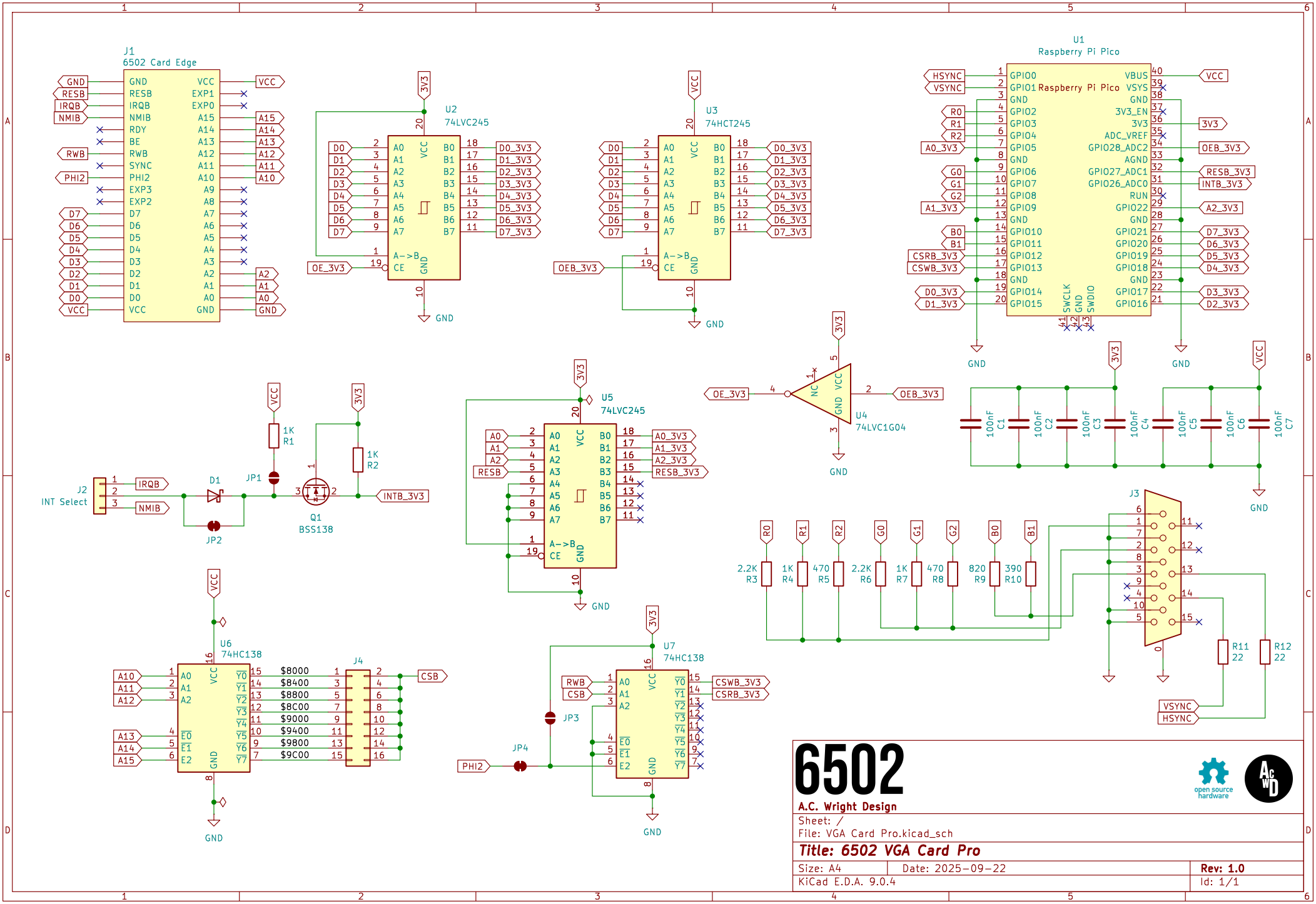
J1
6502 Card Edge
U1
Raspberry Pi Pico
U2
74LVC245
U3
74HCT245
U4
74LVC1G04
U5
74LVC245
U6
74HC138
U7
74HC138
J2
INT Select
J3
J4
Q1
BSS138
D1
JP1
JP2
JP3
JP4
R1 1K
R2 1K
R3 2.2K
R4 1K
R5 470
R6 2.2K
R7 1K
R8 470
R9 820
R10 390
R11 22
R12 22
C1 100nF
C2 100nF
C3 100nF
C4 100nF
C5 100nF
C6 100nF
C7 100nF
GND
VCC
3V3
IRQB
NMIB
INTB_3V3
CSB
CSWB_3V3
CSRB_3V3
VSYNC
HSYNC
OE_3V3
OEB_3V3
RESB_3V3
INTB_3V3
A2_3V3
D7_3V3
D6_3V3
D5_3V3
D4_3V3
D3_3V3
D2_3V3
A0_3V3
A1_3V3
RESB_3V3
$8000
$8400
$8800
$8C00
$9000
$9400
$9800
$9C00
6502
A.C. Wright Design
Sheet: /
File: VGA Card Pro.kicad_sch
Title: 6502 VGA Card Pro
Size: A4
Date: 2025-09-22
Rev: 1.0
KiCad E.D.A. 9.0.4
Id: 1/1