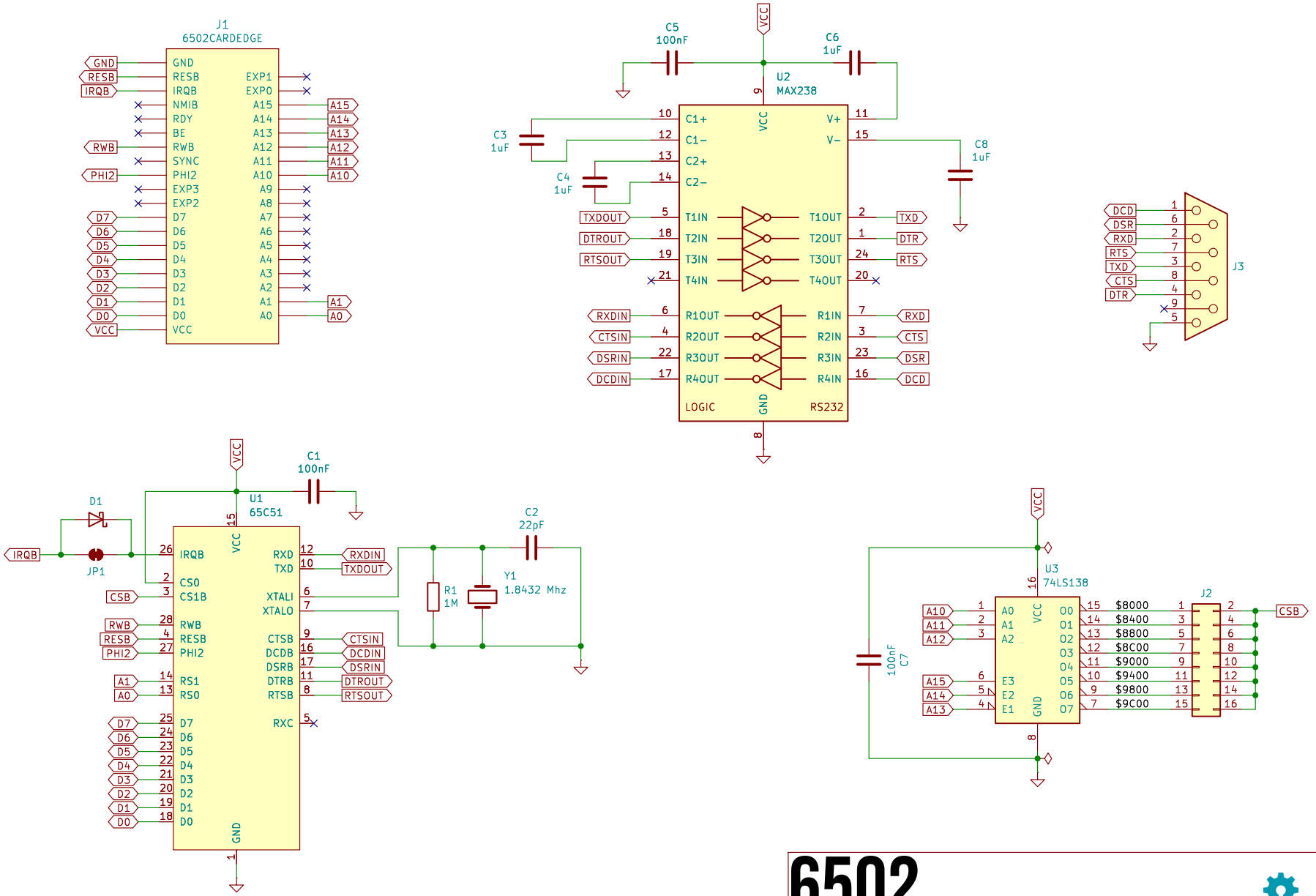


# 6502

**A.C. Wright Design**

open source hardware

Sheet: /

File: Serial Card.kicad_sch

***Title: 6502 Serial Card***

| | | |
|---|---|---|
| Size: USLetter | Date: 2024-04-22 | **Rev: 1.0** |
| KiCad E.D.A. 8.0.1 | | Id: 1/1 |