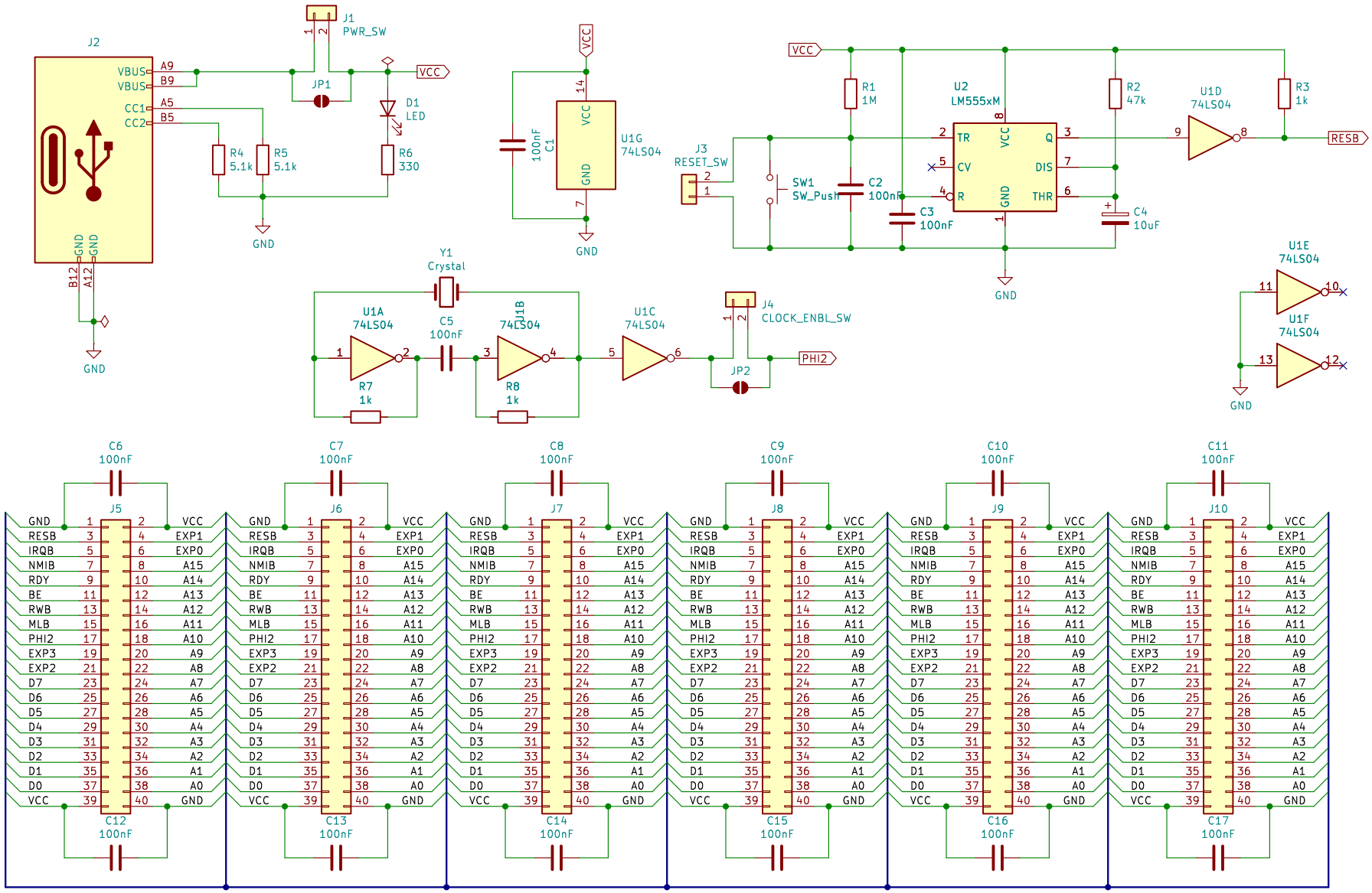

6502 BACKPLANE

A.C. Wright Design

Sheet: /

File: Backplane.kicad_sch

Title: 6502 Backplane

Size: USLetter	Date: 2024-03-19	**Rev: 2.0**
KiCad E.D.A. 8.0.1		Id: 1/1

H1 H2 H3 H4