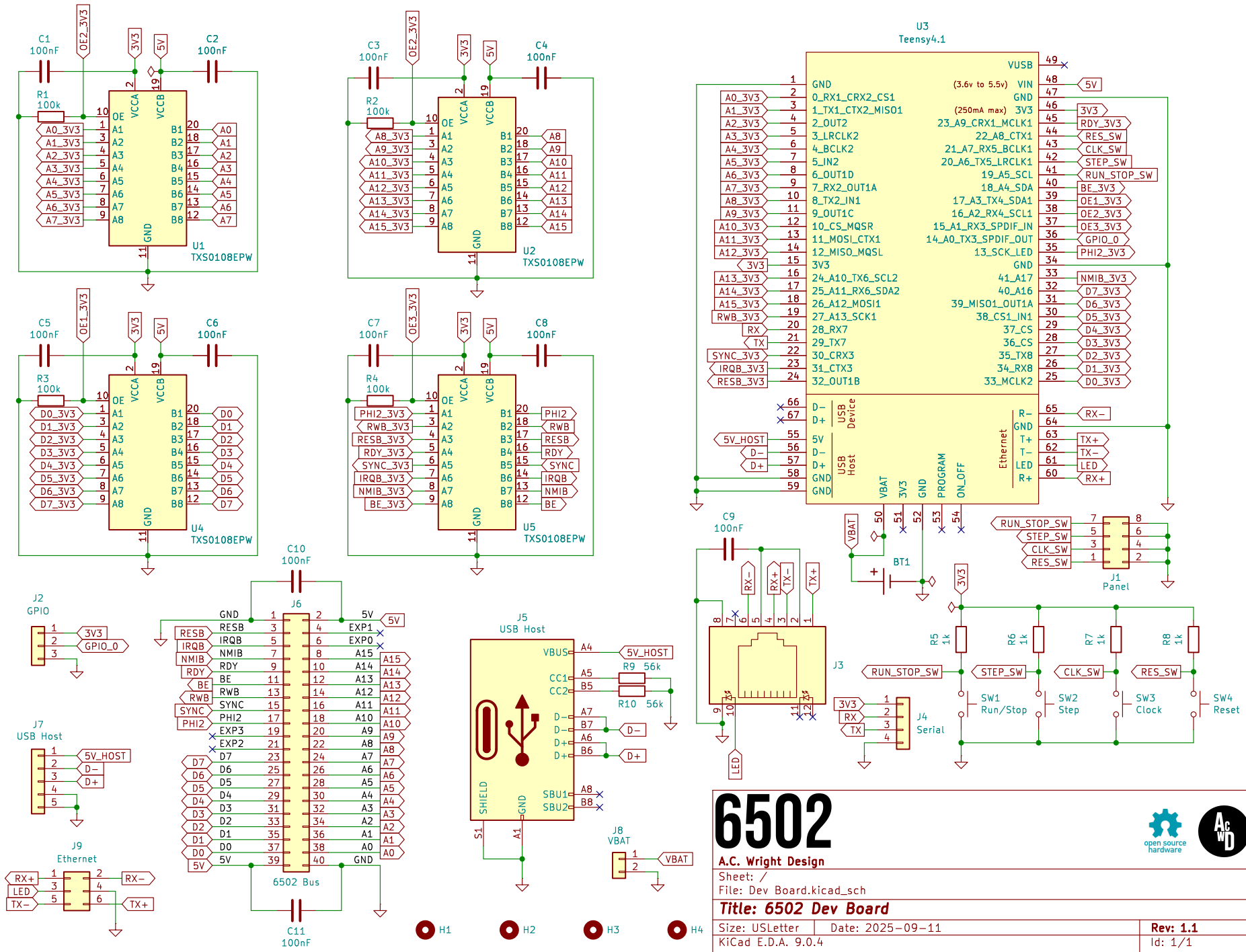
U1 TXS0108EPW
U2 TXS0108EPW
U4 TXS0108EPW
U5 TXS0108EPW
U3 Teensy4.1
J1 Panel
J2 GPIO
J3
J4 Serial
J5 USB Host
J6 6502 Bus
J7 USB Host
J8 VBAT
J9 Ethernet
BT1
SW1 Run/Stop
SW2 Step
SW3 Clock
SW4 Reset
H1
H2
H3
H4
6502
A.C. Wright Design
Sheet: /
File: Dev Board.kicad_sch
Title: 6502 Dev Board
Size: USLetter
Date: 2025-09-11
Rev: 1.1
KiCad E.D.A. 9.0.4
Id: 1/1