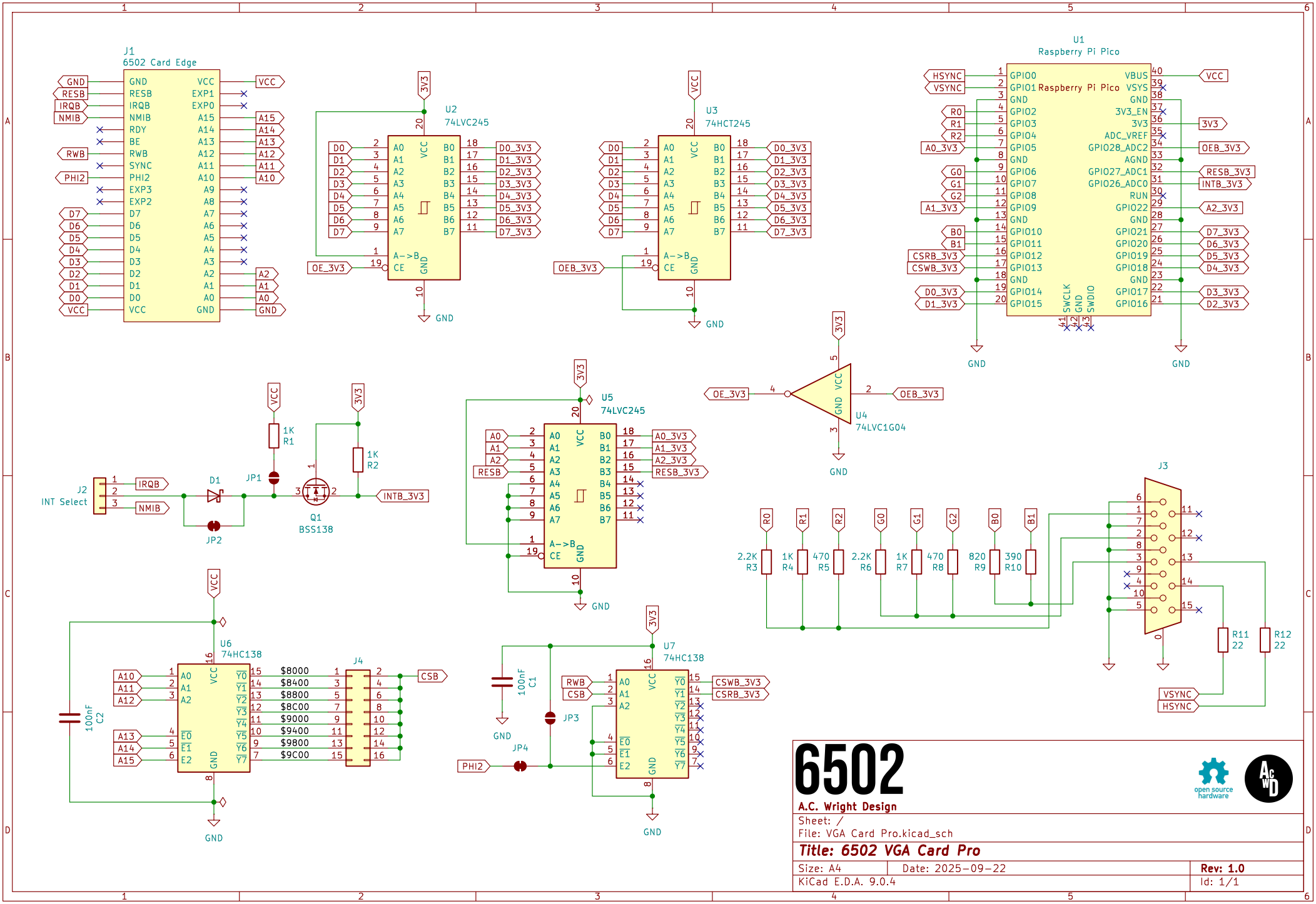
J1
6502 Card Edge
U2
74LVC245
U3
74HCT245
U1
Raspberry Pi Pico
U4
74LVC1G04
U5
74LVC245
J2
INT Select
Q1
BSS138
U6
74HC138
U7
74HC138
J3
J4
6502
A.C. Wright Design
Sheet: /
File: VGA Card Pro.kicad_sch
Title: 6502 VGA Card Pro
Size: A4
Date: 2025-09-22
Rev: 1.0
KiCad E.D.A. 9.0.4
Id: 1/1