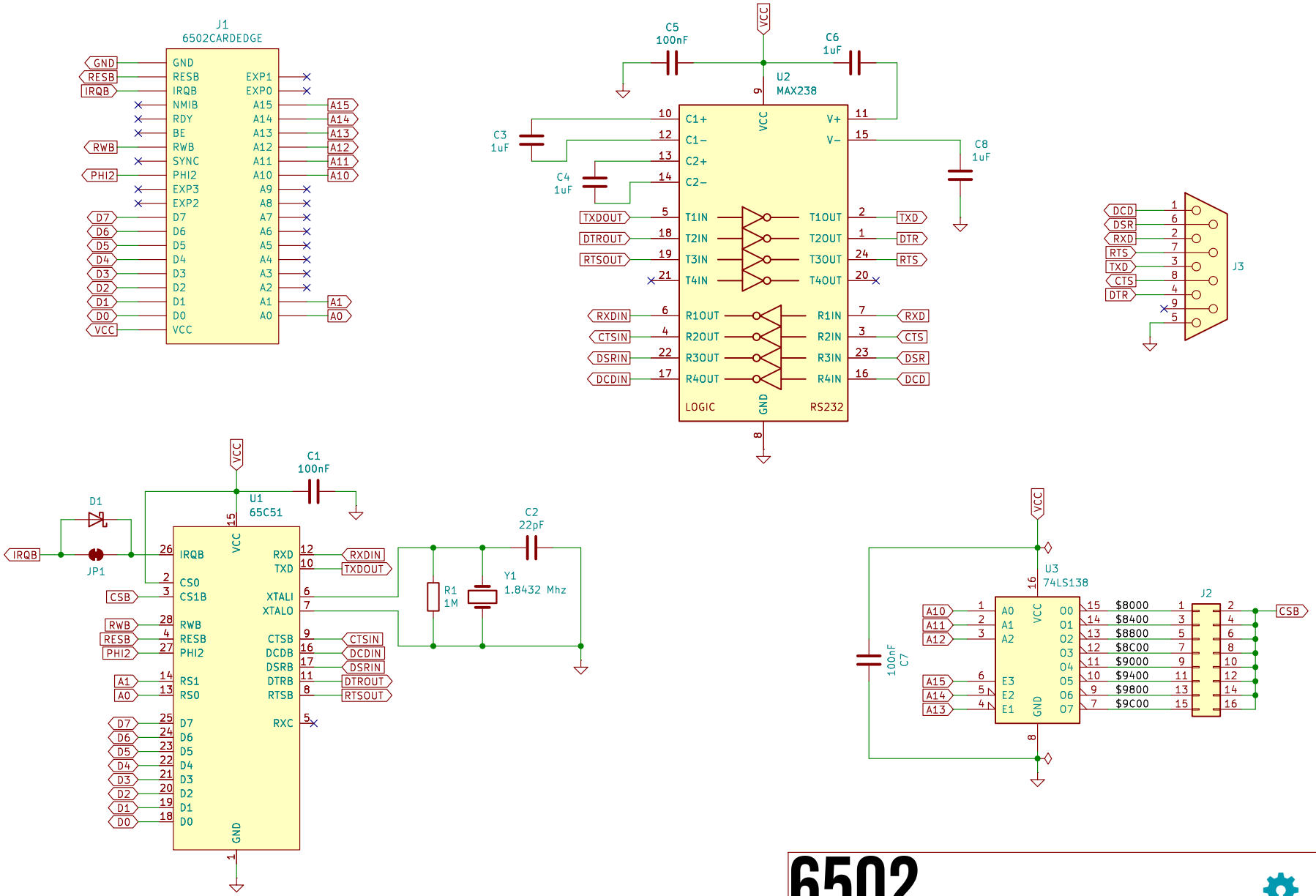

6502

A.C. Wright Design

open source hardware

Sheet: /

File: Serial Card.kicad_sch

Title: 6502 Serial Card

Size: USLetter	Date: 2024-04-21	**Rev: 1.1**
KiCad E.D.A. 8.0.1		Id: 1/1