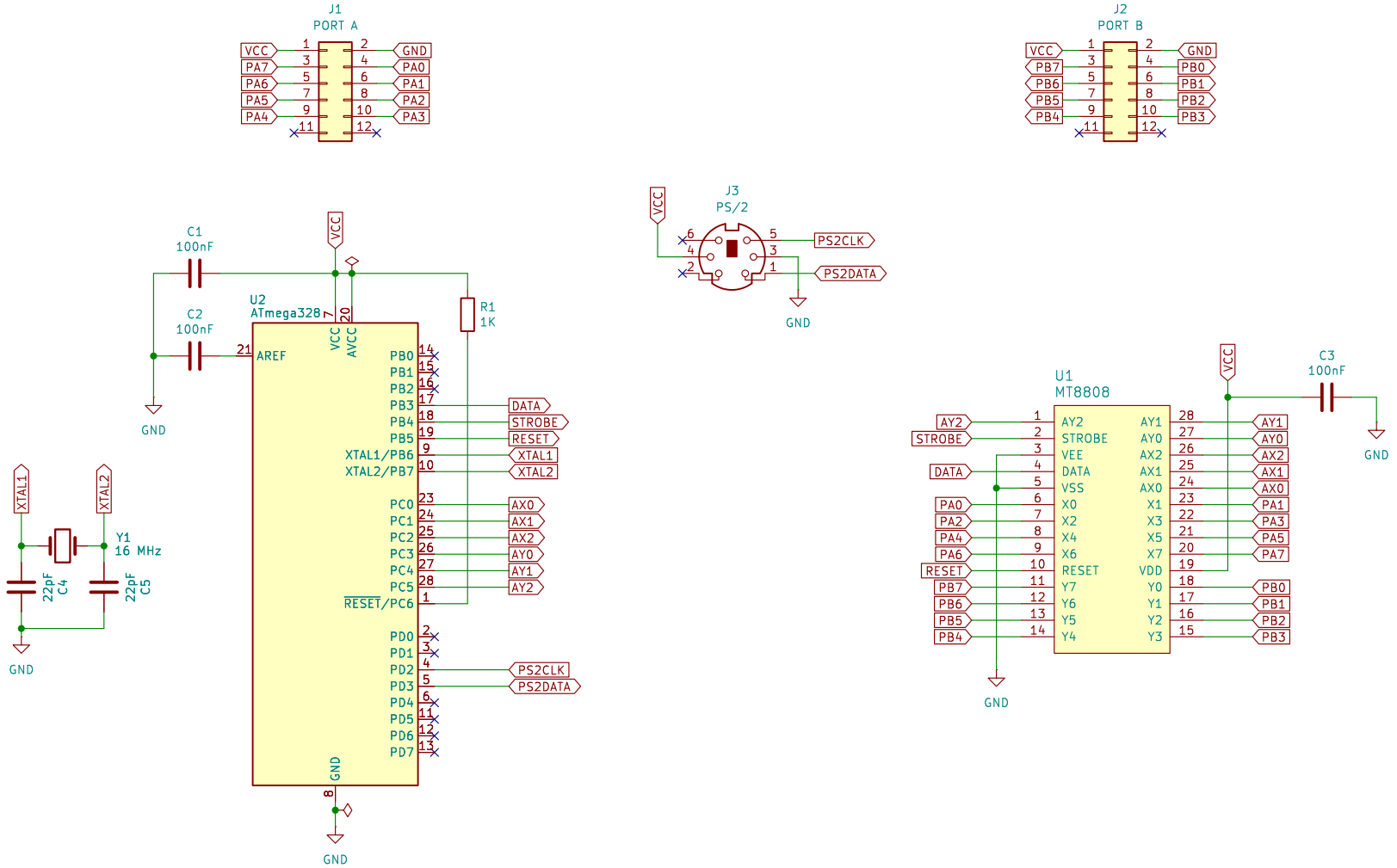

6502

A.C. Wright Design

Sheet: /

File: PS2 Helper.kicad_sch

Title: 6502 PS2 Helper

Size: USLetter	Date: 2025-09-24	**Rev: 1.0**
KiCad E.D.A. 9.0.4		Id: 1/1