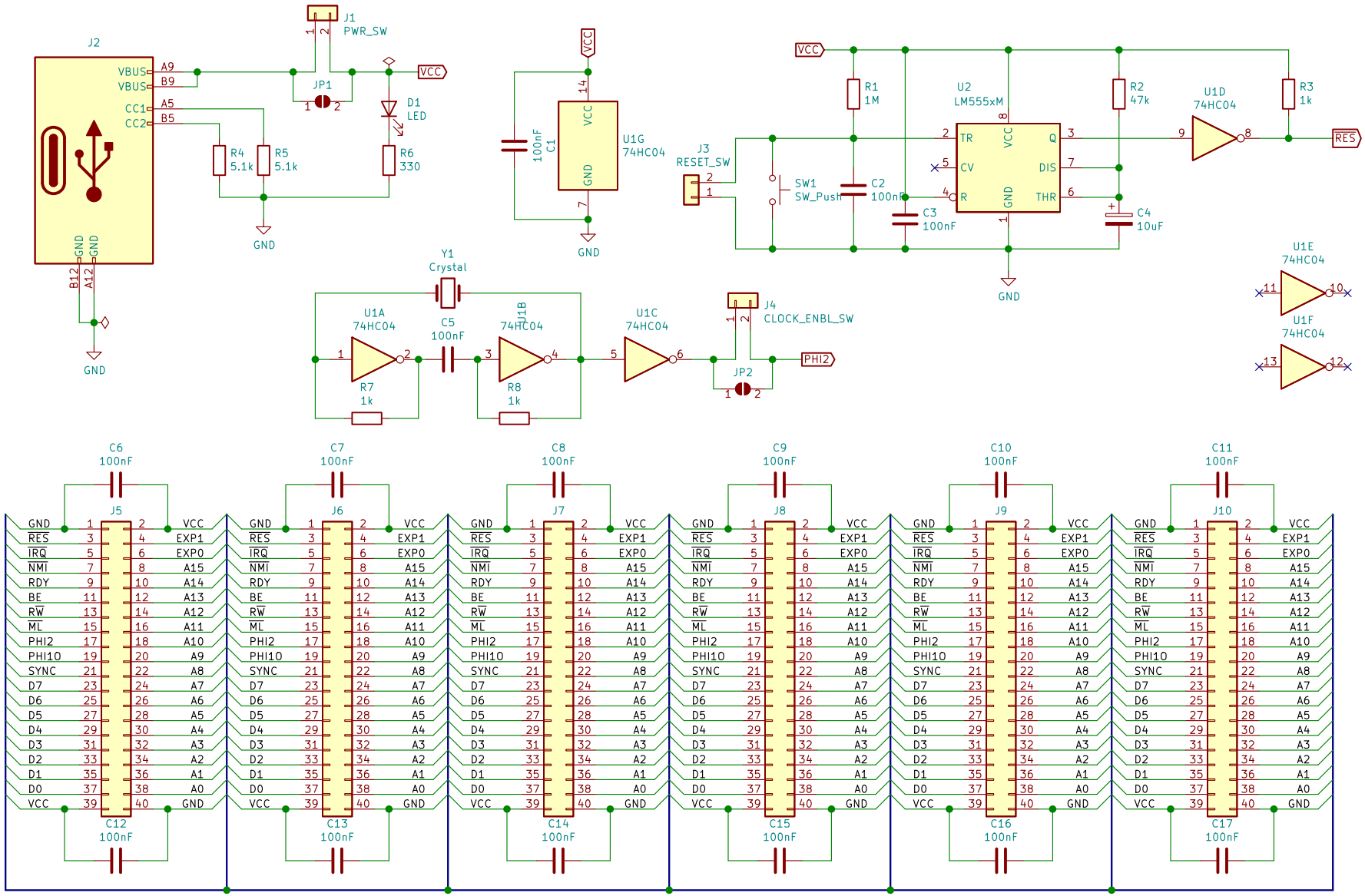

6502 BACKPLANE

A.C. Wright Design

Sheet: /
File: Backplane.sch

Title: 6502 Backplane

Size: USLetter	Date: 2021-03-24	**Rev: 1**
KiCad E.D.A. kicad (5.1.9-0-10_14)		Id: 1/1