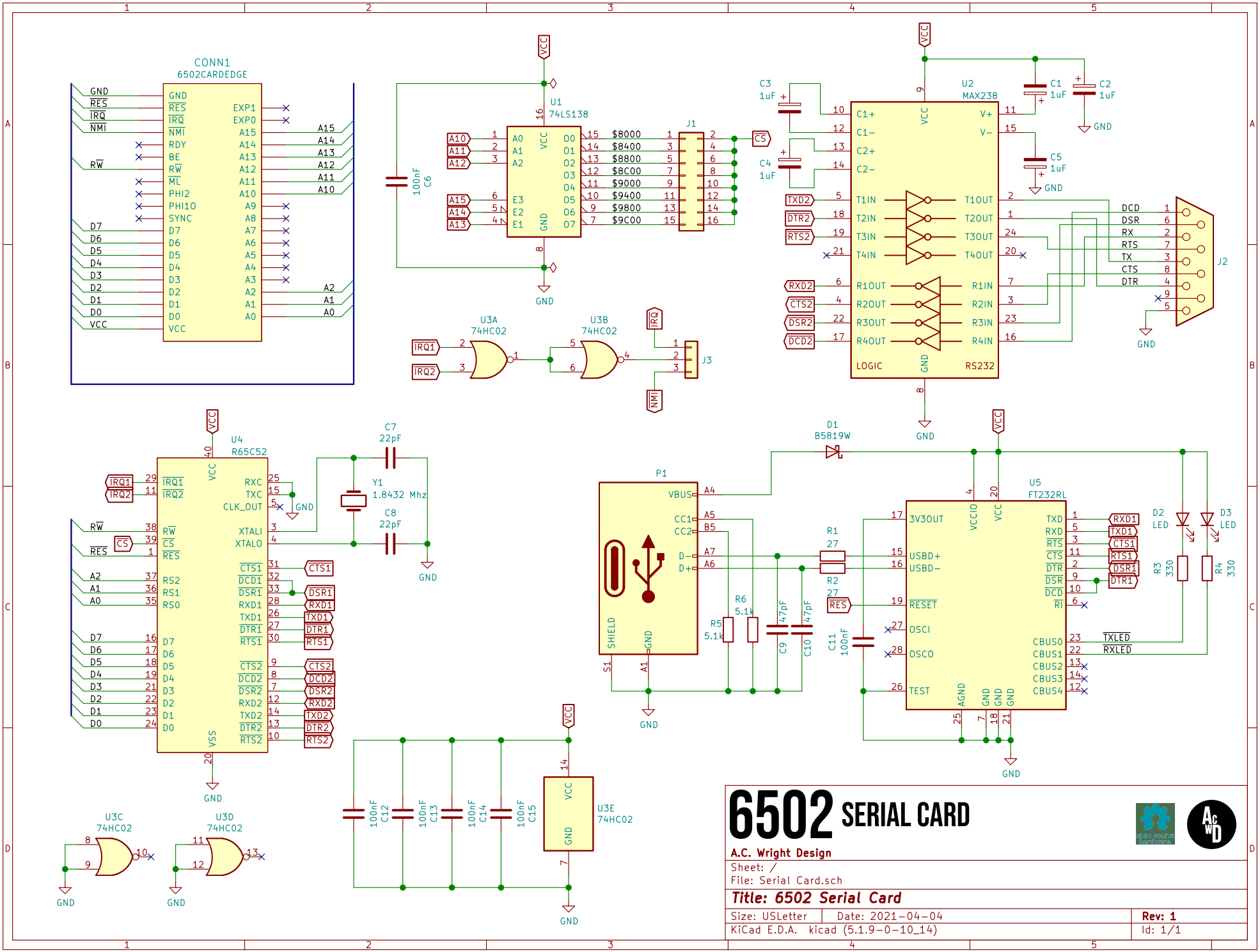
CONN1
6502CARDEDGE
U1
74LS138
U2
MAX238
J1
J2
J3
U3A
74HC02
U3B
74HC02
U4
R65C52
Y1
1.8432 Mhz
C7
22pF
C8
22pF
P1
D1
B5819W
U5
FT232RL
D2
LED
D3
LED
R1
27
R2
27
R3
330
R4
330
R5
5.1k
R6
5.1k
C9
47pF
C10
47pF
C11
100nF
U3C
74HC02
U3D
74HC02
U3E
74HC02
100nF
C12
100nF
C13
100nF
C14
100nF
C15
100nF
C6
C1
1uF
C2
1uF
C3
1uF
C4
1uF
C5
1uF
VCC
GND
6502 SERIAL CARD
A.C. Wright Design
Sheet: /
File: Serial Card.sch
Title: 6502 Serial Card
Size: USLetter
Date: 2021-04-04
Rev: 1
KiCad E.D.A. kicad (5.1.9-0-10_14)
Id: 1/1