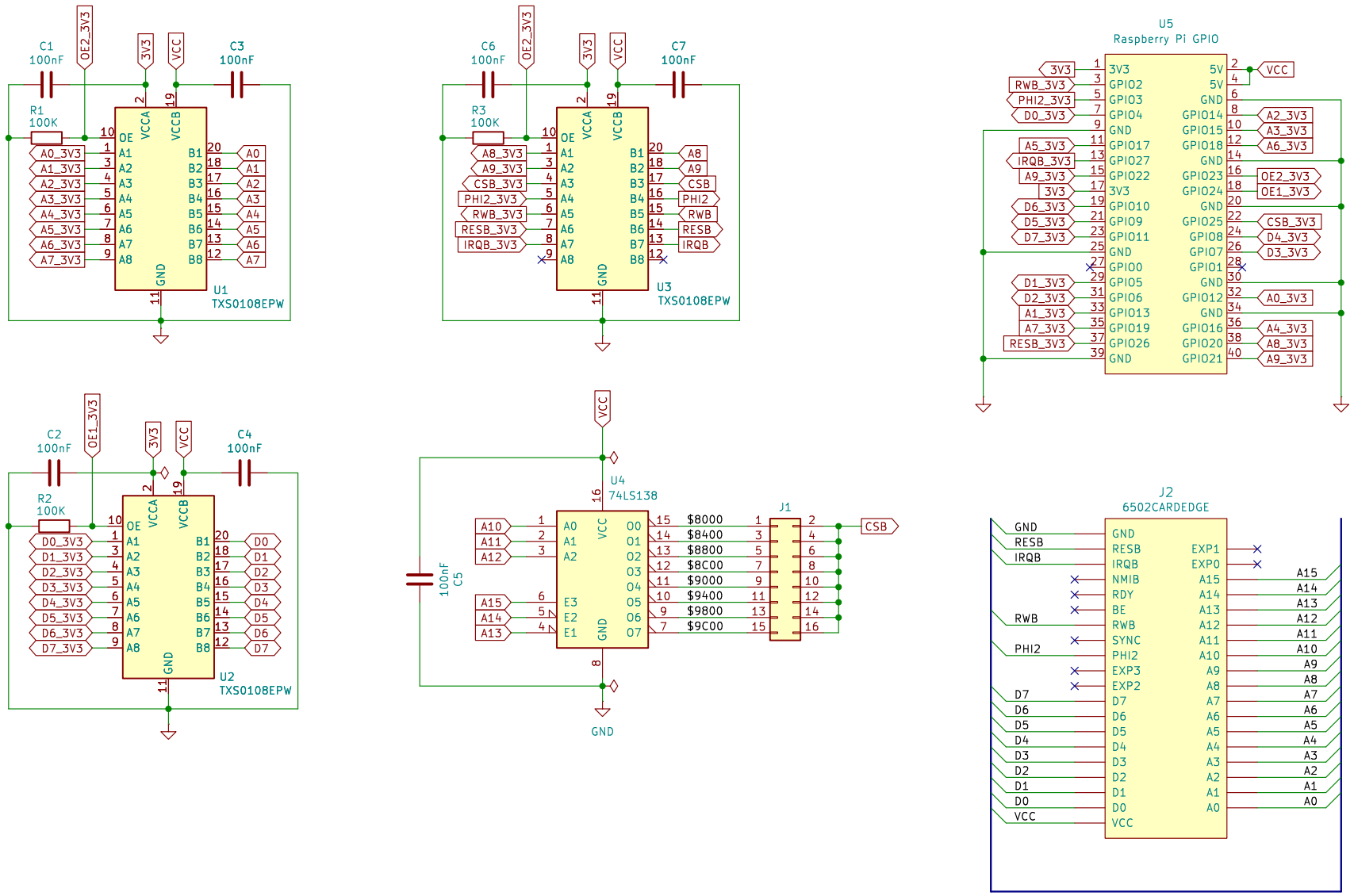

6502

A.C. Wright Design

Sheet: /

File: Pi Card.kicad_sch

Title: Pi Card

Size: USLetter	Date: 2024-03-22	**Rev: 1.0**
KiCad E.D.A. 8.0.1		Id: 1/1