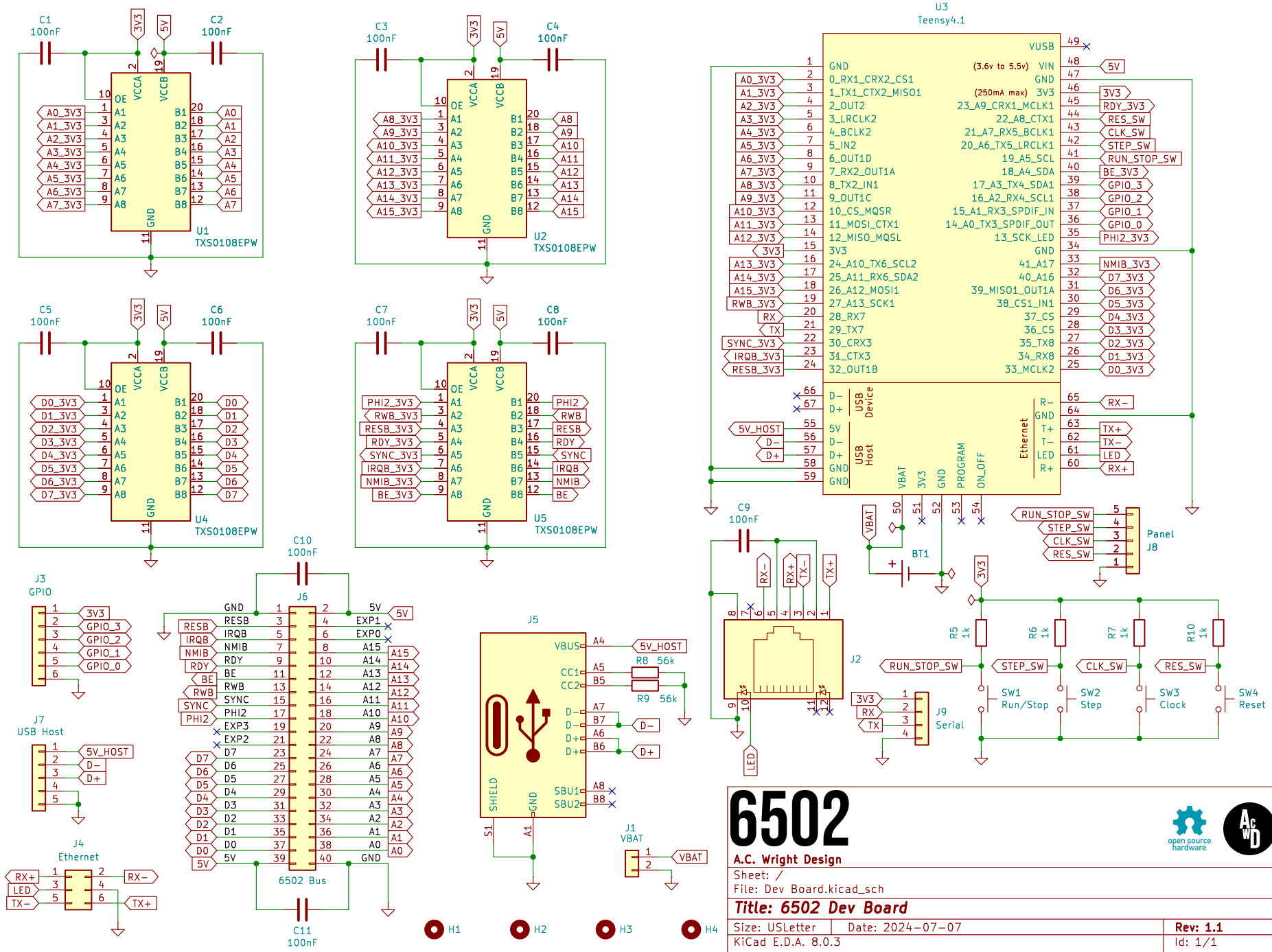

6502

A.C. Wright Design

Sheet: /

File: Dev Board.kicad_sch

Title: 6502 Dev Board

Size: USLetter	Date: 2024-07-07	**Rev: 1.1**
KiCad E.D.A. 8.0.3		Id: 1/1