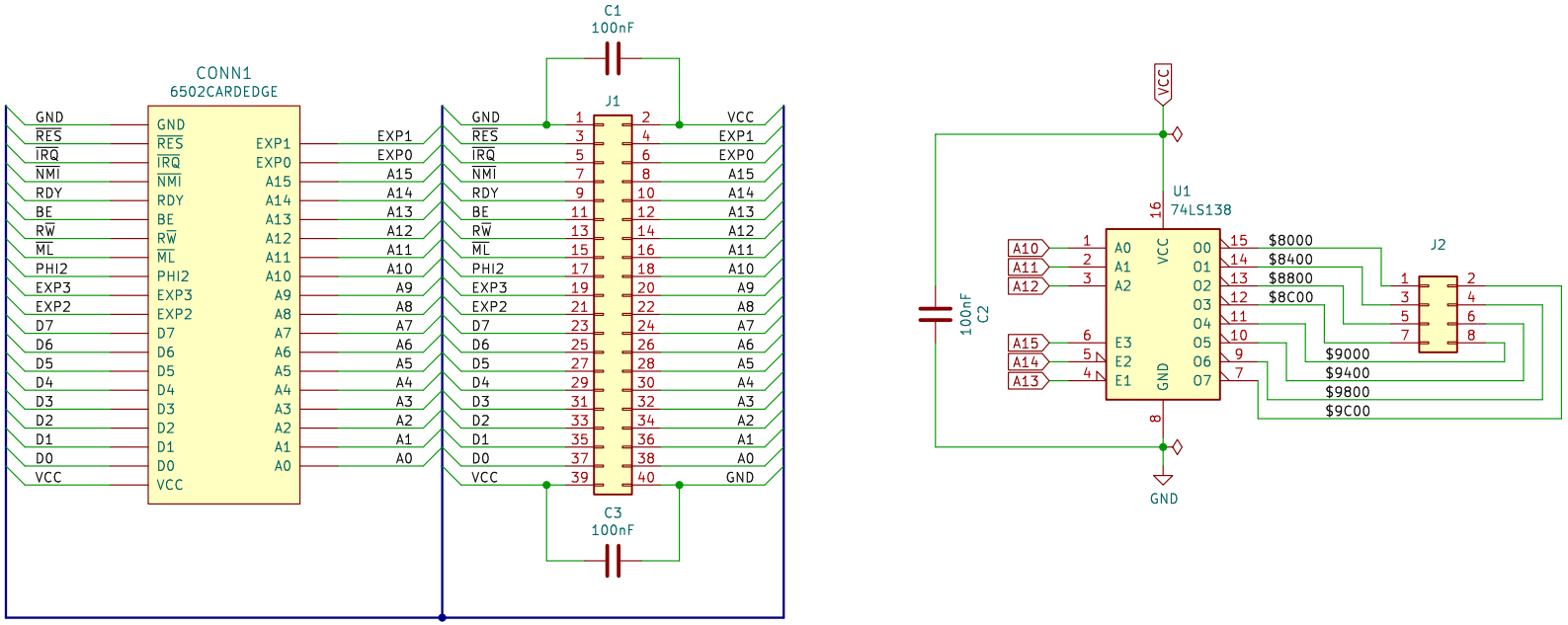

B1

BREADBOARDMINI

B2

BREADBOARDMINI

6502 PROTOTYPE CARD

A.C. Wright Design

Sheet: /

File: Prototype Card.kicad_sch

Title: 6502 Prototype Card

Size: USLetter	Date: 2021-03-27	**Rev: 1.1**
KiCad E.D.A. 8.0.1		Id: 1/1