CPU / CLOCK

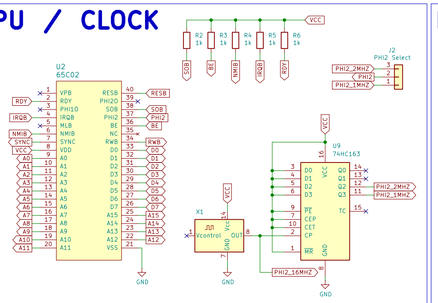

IO 6 | GPIO

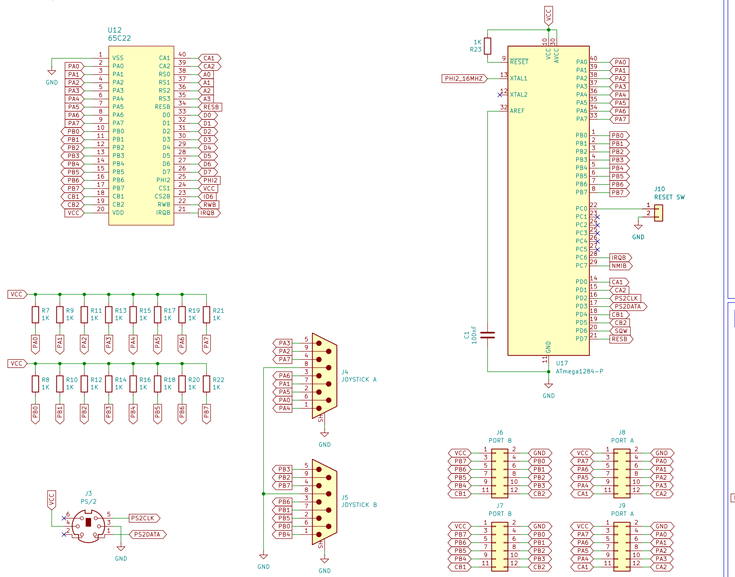

IO8 | VIDEO

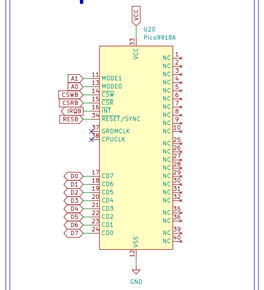

IO5 | SERIAL

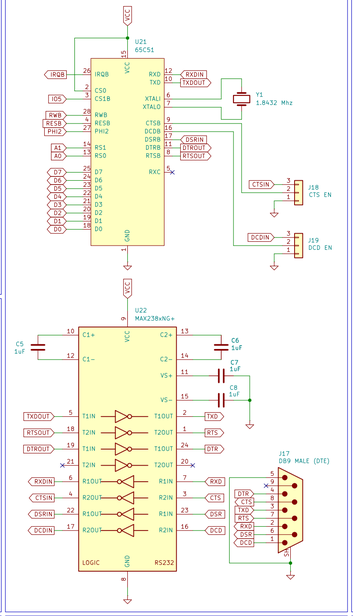

KEYBOARD MATRIX

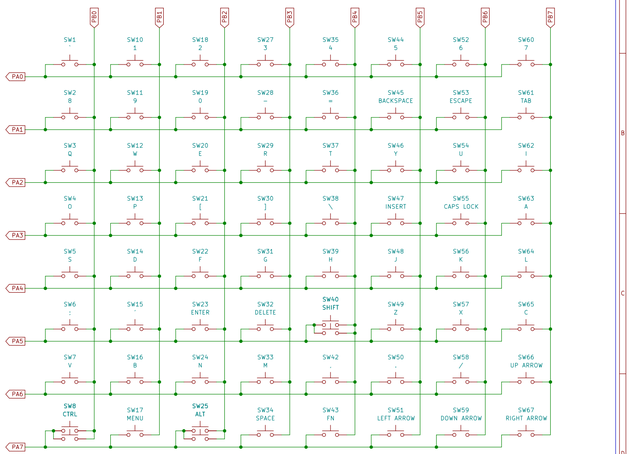

RAM / ROM

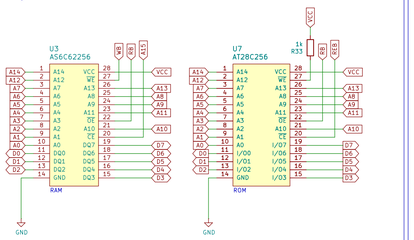

IO7 | SOUND

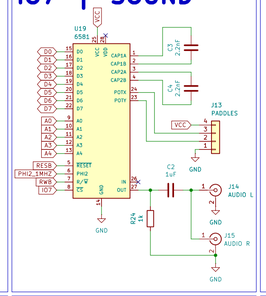

CART / EXP PORT

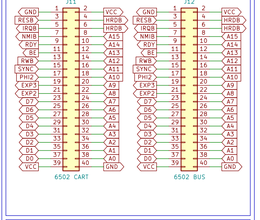

IO4 / STORAGE

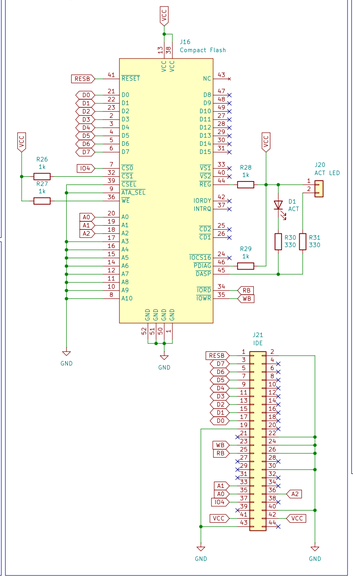

POWER

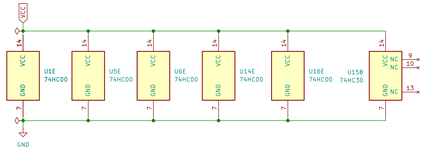

ROM DECODING

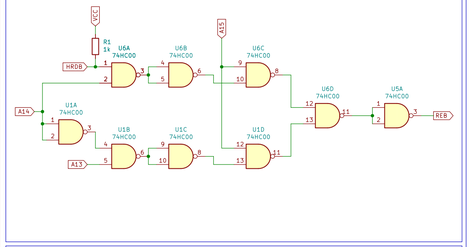

IO 1&2 | EXTENDED RAM

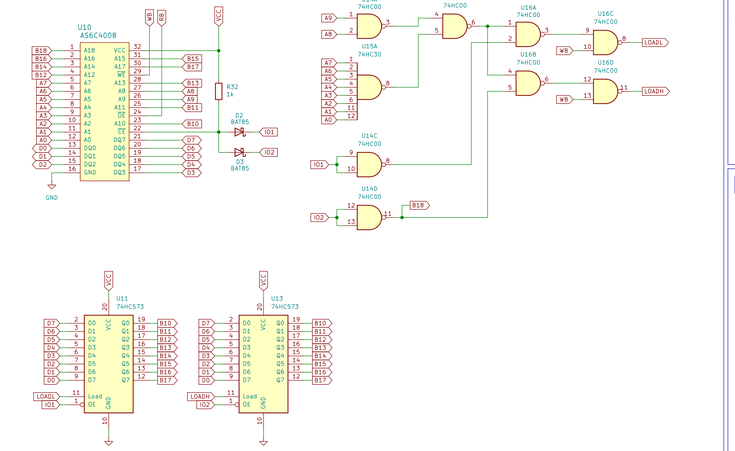

IO DECODING

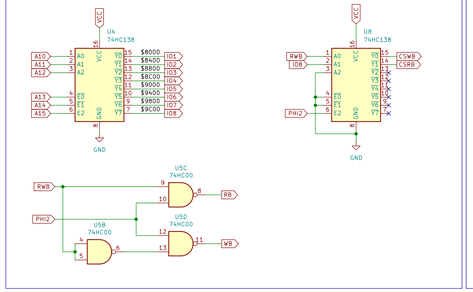

IO3 | RTC

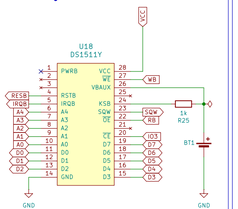

6502

A.C. Wright Design

Sheet: /

File: 6502-ACE.kicad_sch

Title: 6502 ACE

Size: User | Date: 2026-04-25 | Rev: 1.0

KiCad E.D.A. 10.0.1 | Id: 1/1