REVISION RECORD			
LTR	ECO NO:	APPROVED:	DATE:

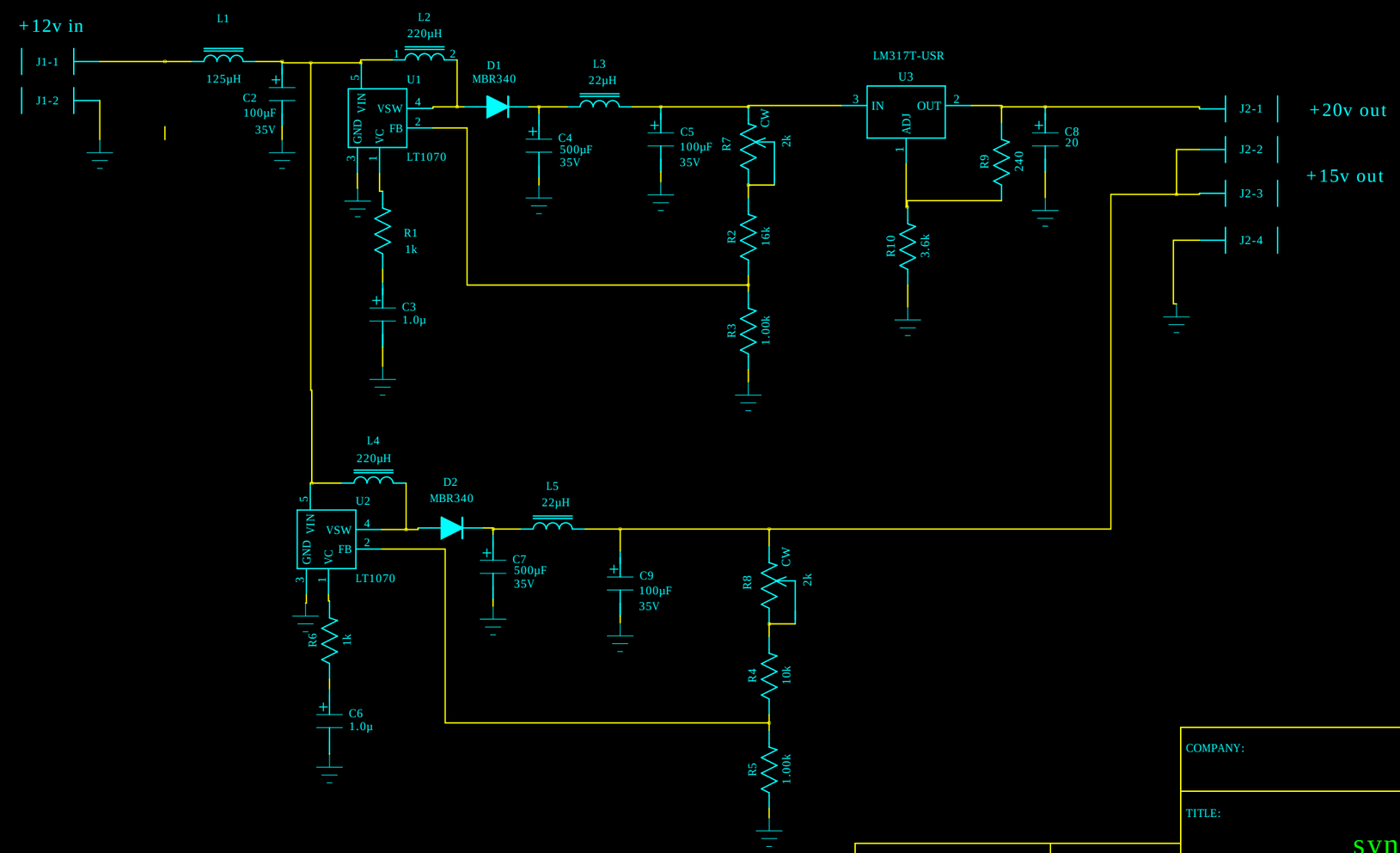

DRAWN: esj	DATED: 25 feb 2006		
CHECKED: esj	DATED: 25 feb 2006		
QUALITY CONTROL: <QC By>	DATED: <QC Date>		
RELEASED: esj	DATED: 25 feb 2006		

COMPANY: FSCD Research

TITLE: synthesizer power supply

CODE:	SIZE:	DRAWING NO:	REV:
0	B	022506-01	1

SCALE: <Scale> SHEET: 1 OF 1