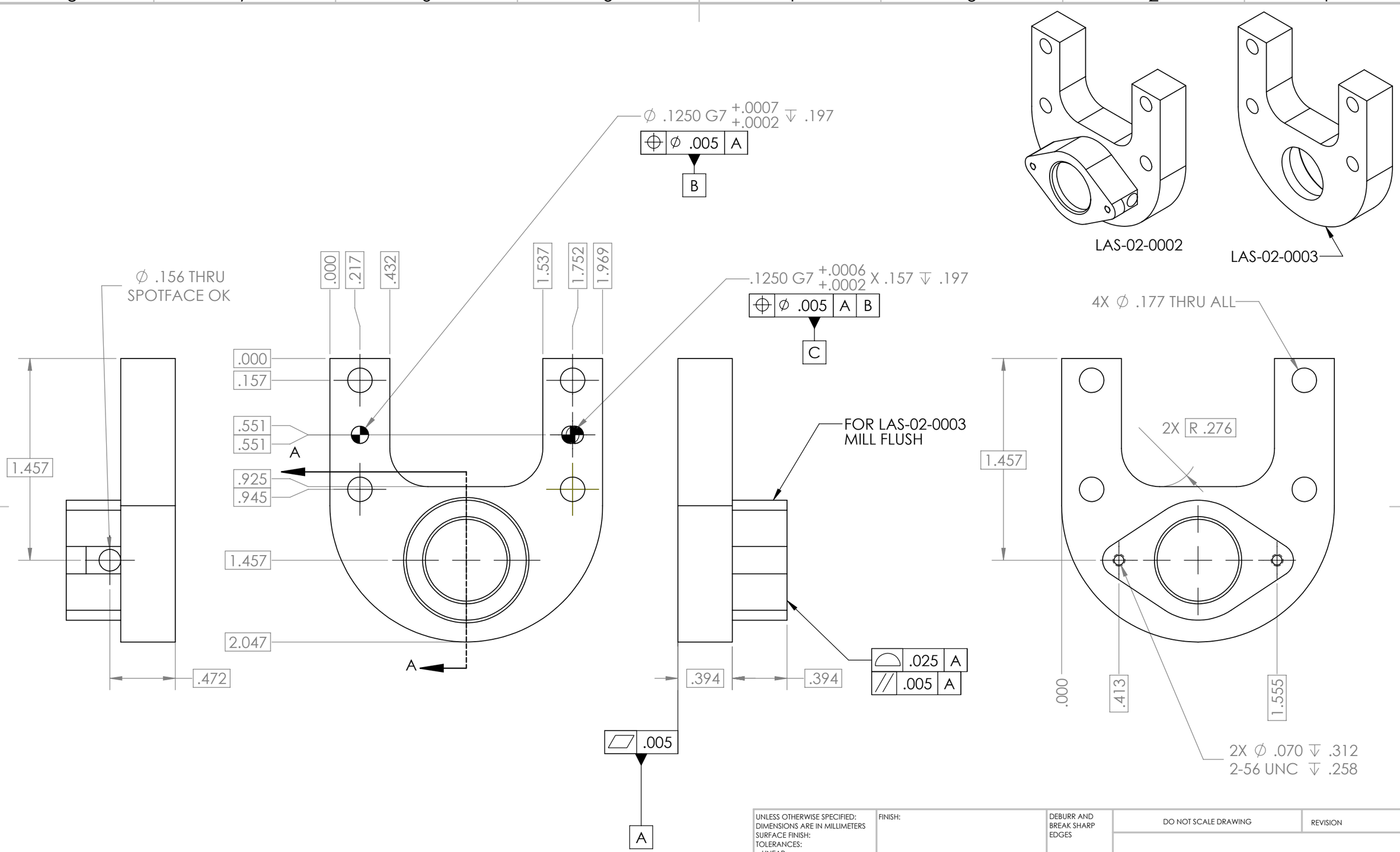

NOTES:

TOLERANCING PER ASME 14.5Y-2009
MATERIAL - AISI 316

⌓ .020 A B C UNLESS OTHERWISE STATED

ALL HOLES ⌖ ∅ .020 A B C UNLESS OTHERWISE STATED

UNLESS OTHERWISE SPECIFIED: DIMENSIONS ARE IN MILLIMETERS SURFACE FINISH: TOLERANCES: LINEAR: ANGULAR:	FINISH:			DEBURR AND BREAK SHARP EDGES	DO NOT SCALE DRAWING	REVISION
	NAME	SIGNATURE	DATE		TITLE: LAS AZIMUTH AXIS - ENCODER	
DRAWN						
CHK'D						
APPV'D						
MFG						
Q.A				MATERIAL:	DWG NO. LAS-02-0002	A3
				WEIGHT:	SCALE:1.5:1	SHEET 1 OF 2

SOLIDWORKS Educational Product. For Instructional Use Only.

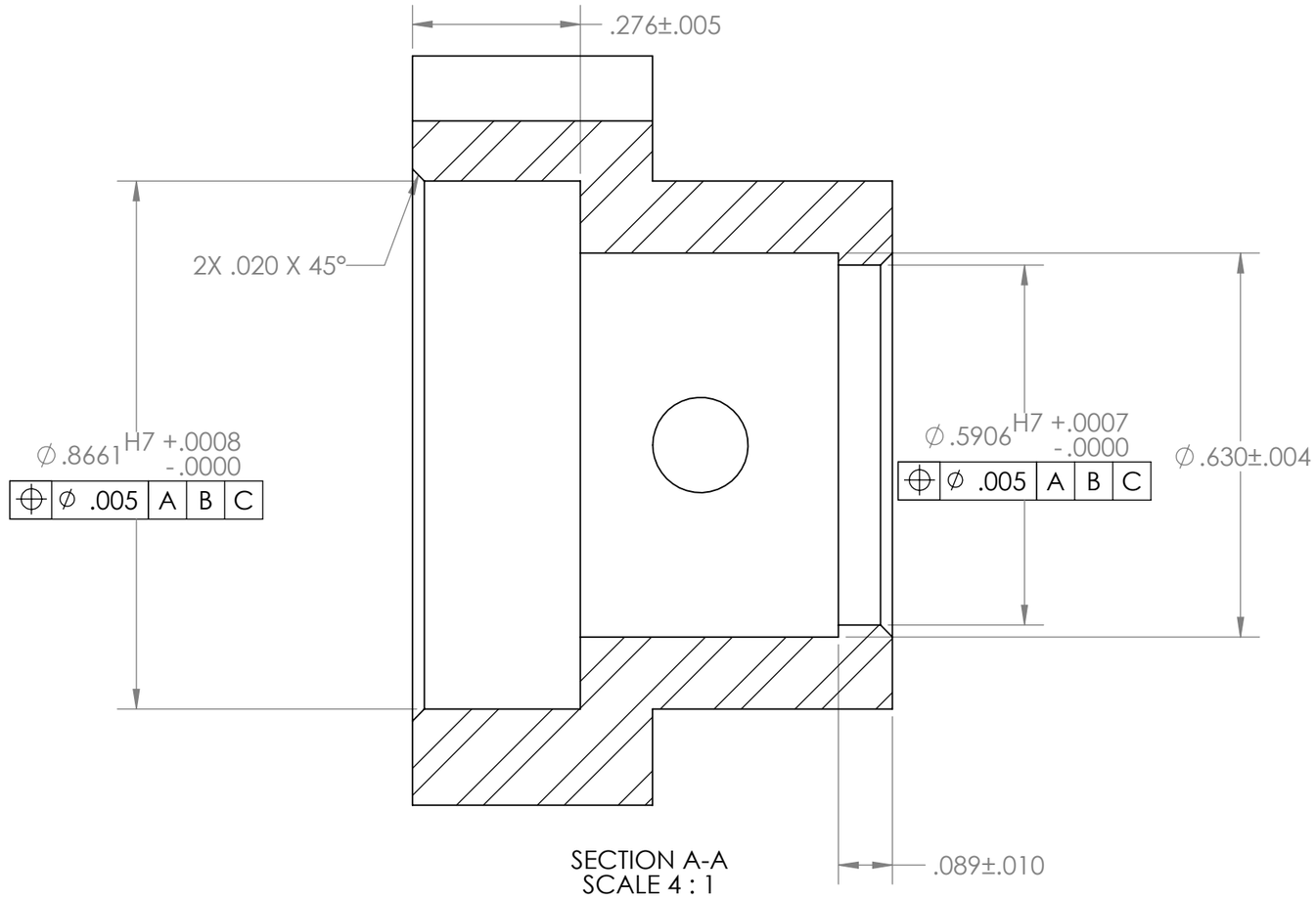

SECTION A-A
SCALE 4 : 1

UNLESS OTHERWISE SPECIFIED: DIMENSIONS ARE IN MILLIMETERS SURFACE FINISH: TOLERANCES: LINEAR: ANGULAR:	FINISH:			DEBURR AND BREAK SHARP EDGES	DO NOT SCALE DRAWING	REVISION
	NAME	SIGNATURE	DATE		TITLE: LAS AZIMUTH AXIS - ENCODER	
DRAWN						
CHK'D						
APPV'D						
MFG						
Q.A				MATERIAL:	DWG NO. LAS-02-0002	A3
				WEIGHT:	SCALE:1.5:1	SHEET 2 OF 2

SOLIDWORKS Educational Product. For Instructional Use Only.