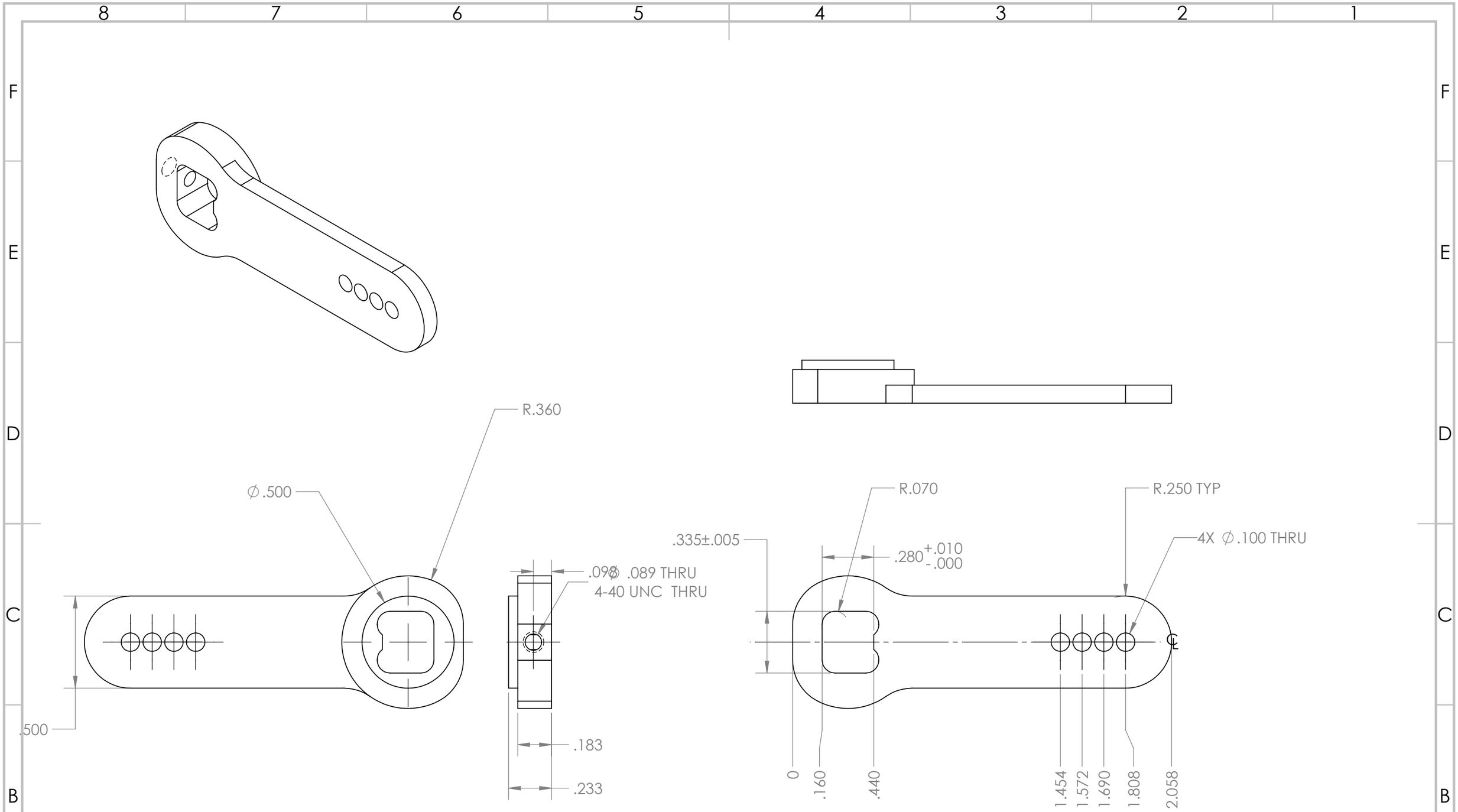

1. MAKE FROM 6061
2. TOLERANCES +- .005 UNLESS OTHERWISE SPECIFIED

UNLESS OTHERWISE SPECIFIED: DIMENSIONS ARE IN MILLIMETERS SURFACE FINISH: TOLERANCES: LINEAR: ANGULAR:	FINISH:			DEBURR AND BREAK SHARP EDGES	DO NOT SCALE DRAWING	REVISION
	NAME	SIGNATURE	DATE		TITLE:	
DRAWN						
CHK'D						
APPV'D						
MFG						
Q.A				MATERIAL:	DWG NO. EXK-02-0013_Metal	A3
				WEIGHT:	SCALE:4:1	SHEET 1 OF 1

SOLIDWORKS Educational Product. For Instructional Use Only.