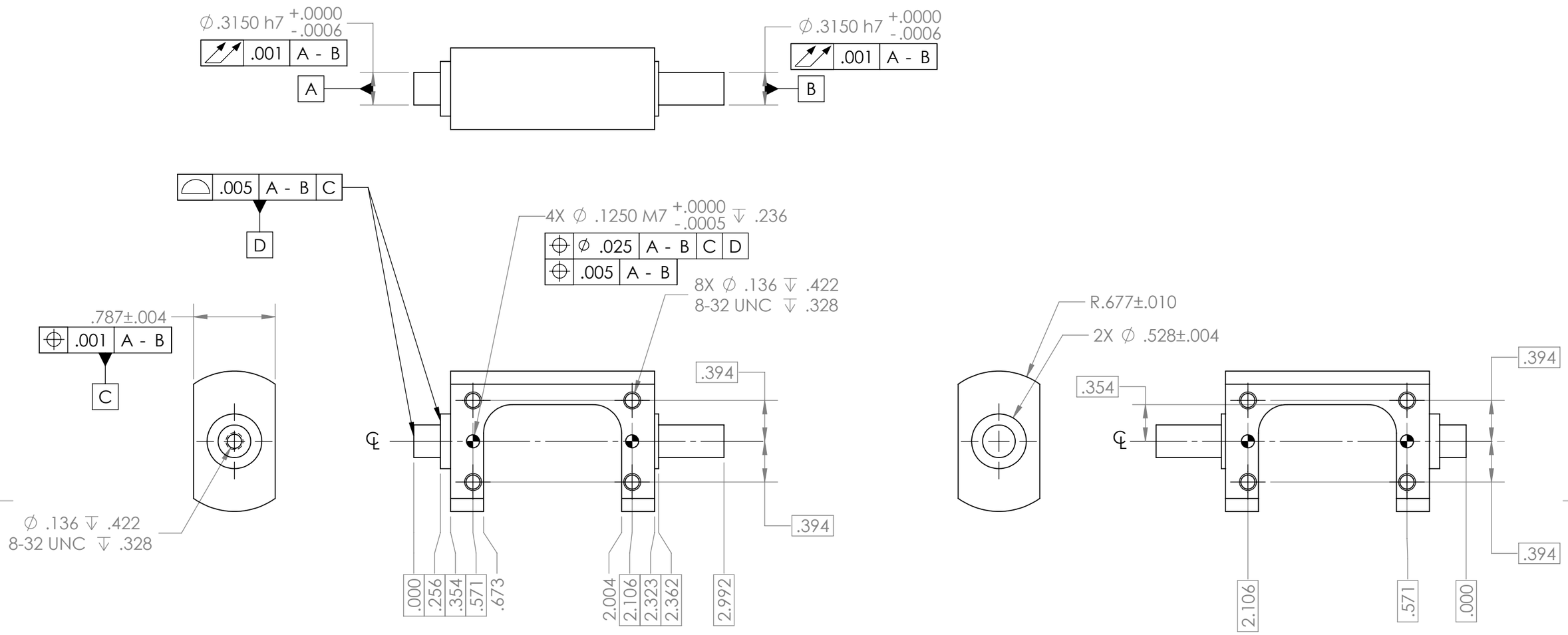

NOTES:

TOLERANCING PER ASME 14.5Y-2009
MATERIAL - AISI 316

.020 A - B C D UNLESS OTHERWISE STATED

ALL FEATURES OF SIZE AND HOLES ∅ .010 A - B C D UNLESS OTHERWISE STATED

UNLESS OTHERWISE SPECIFIED: DIMENSIONS ARE IN MILLIMETERS SURFACE FINISH: TOLERANCES: LINEAR: ANGULAR:	FINISH:		DEBURR AND BREAK SHARP EDGES	DO NOT SCALE DRAWING	REVISION	
	NAME	SIGNATURE	DATE	TITLE: LAS ELEVATION PIVOT ARM		
DRAWN						
CHK'D						
APPV'D						
MFG						
Q.A				MATERIAL:	DWG NO. LAS-02-0006	A3
				WEIGHT:	SCALE:1:1	SHEET 1 OF 1

SOLIDWORKS Educational Product. For Instructional Use Only.