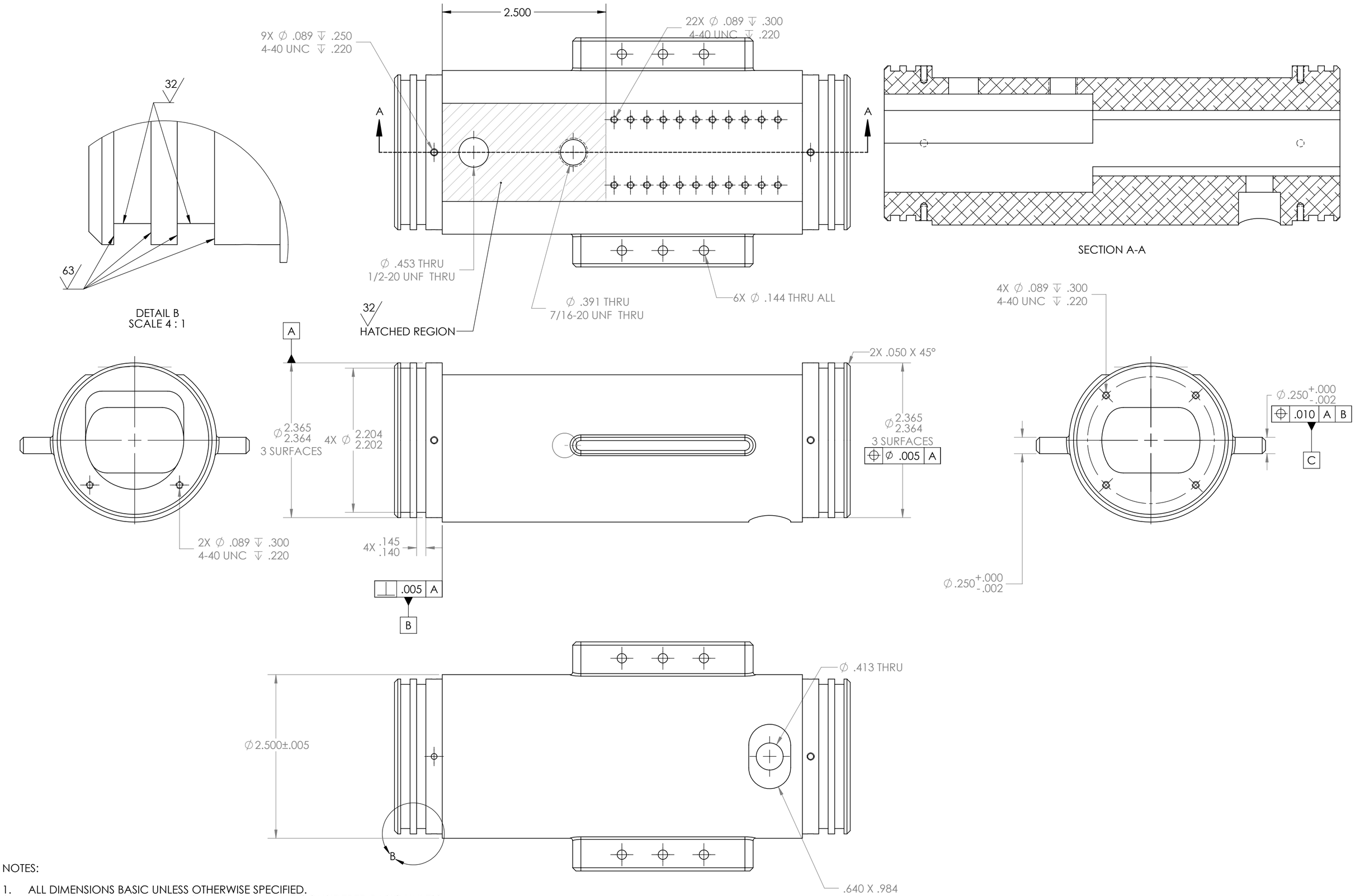

NOTES:

1. ALL DIMENSIONS BASIC UNLESS OTHERWISE SPECIFIED.
2. REDUCED DIMENSION DRAWING. 3D CAD SHALL BE CONSIDERED BASIC UNLESS OTHERWISE SPECIFIED.
3. ALL SURFACES ⌓ .010 A B C UNLESS OTHERWISE SPECIFIED.
4. ALL HOLES ⌖ ∅ .010 A B C UNLESS OTHERWISE SPECIFIED
5. MATERIAL: 6061-T6

PROPRIETARY AND CONFIDENTIAL

THE INFORMATION CONTAINED IN THIS DRAWING IS THE SOLE PROPERTY OF <INSERT COMPANY NAME HERE>. ANY REPRODUCTION IN PART OR AS A WHOLE WITHOUT THE WRITTEN PERMISSION OF <INSERT COMPANY NAME HERE> IS PROHIBITED.

		UNLESS OTHERWISE SPECIFIED:		NAME	DATE
		DIMENSIONS ARE IN INCHES TOLERANCES: FRACTIONAL ± ANGULAR: MACH ± BEND ± TWO PLACE DECIMAL ± THREE PLACE DECIMAL ±	DRAWN		
			CHECKED		
			ENG APPR.		
			MFG APPR.		
		INTERPRET GEOMETRIC TOLERANCING PER:	Q.A.		
		MATERIAL	COMMENTS:		
NEXT ASSY	USED ON	FINISH			
APPLICATION		DO NOT SCALE DRAWING			

TITLE:

WINGBOX

SIZE	DWG. NO.	REV
C	EXK-02-0017	
SCALE: 1:1	WEIGHT:	SHEET 1 OF 1

SOLIDWORKS Educational Product. For Instructional Use Only.