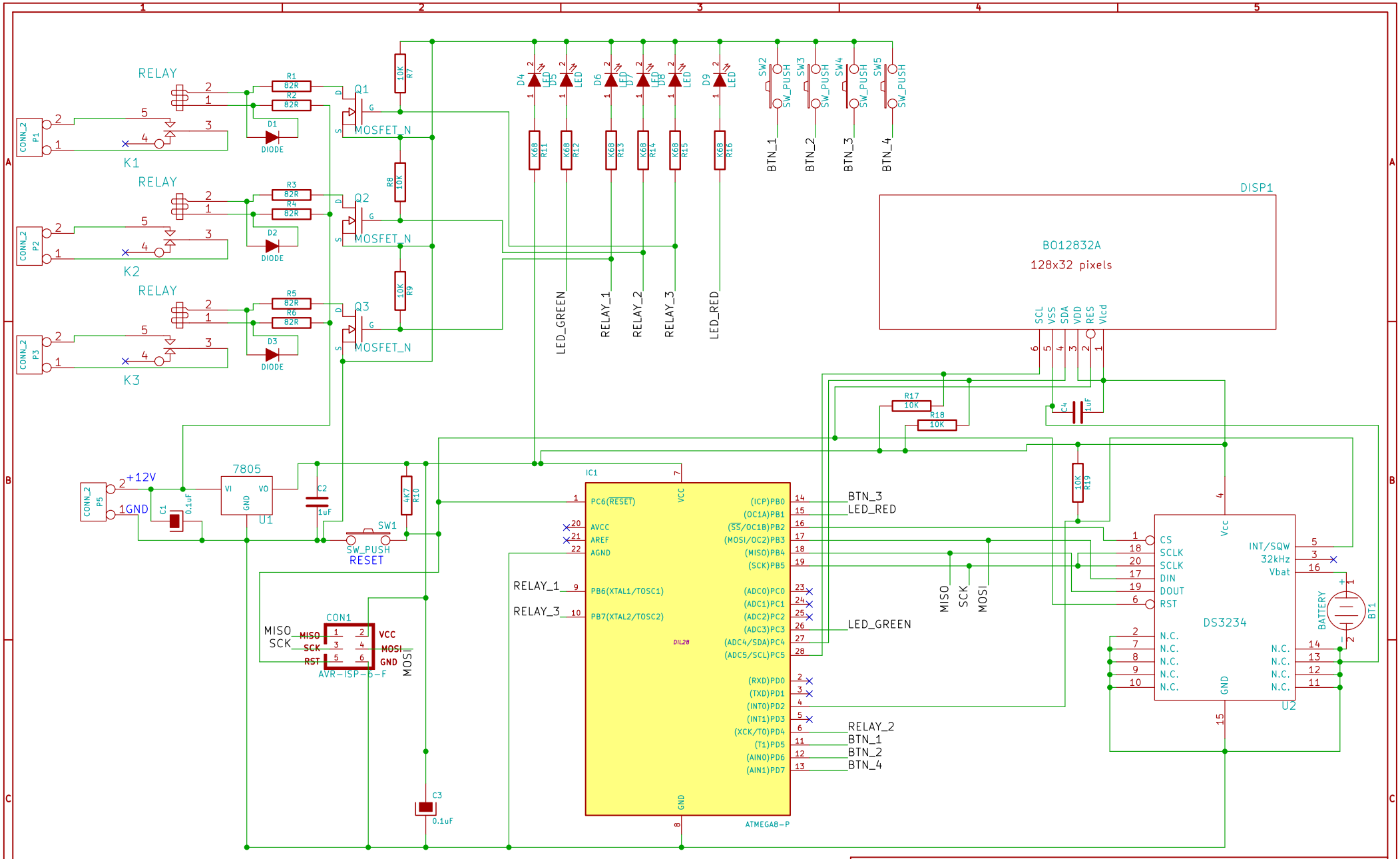

Adam Dej		
File: towertimer.sch		
Sheet: /		
Title: Tower Timer		
Size: A4	Date: 11 feb 2016	Rev: B
KiCad E.D.A.		Id: 1/1