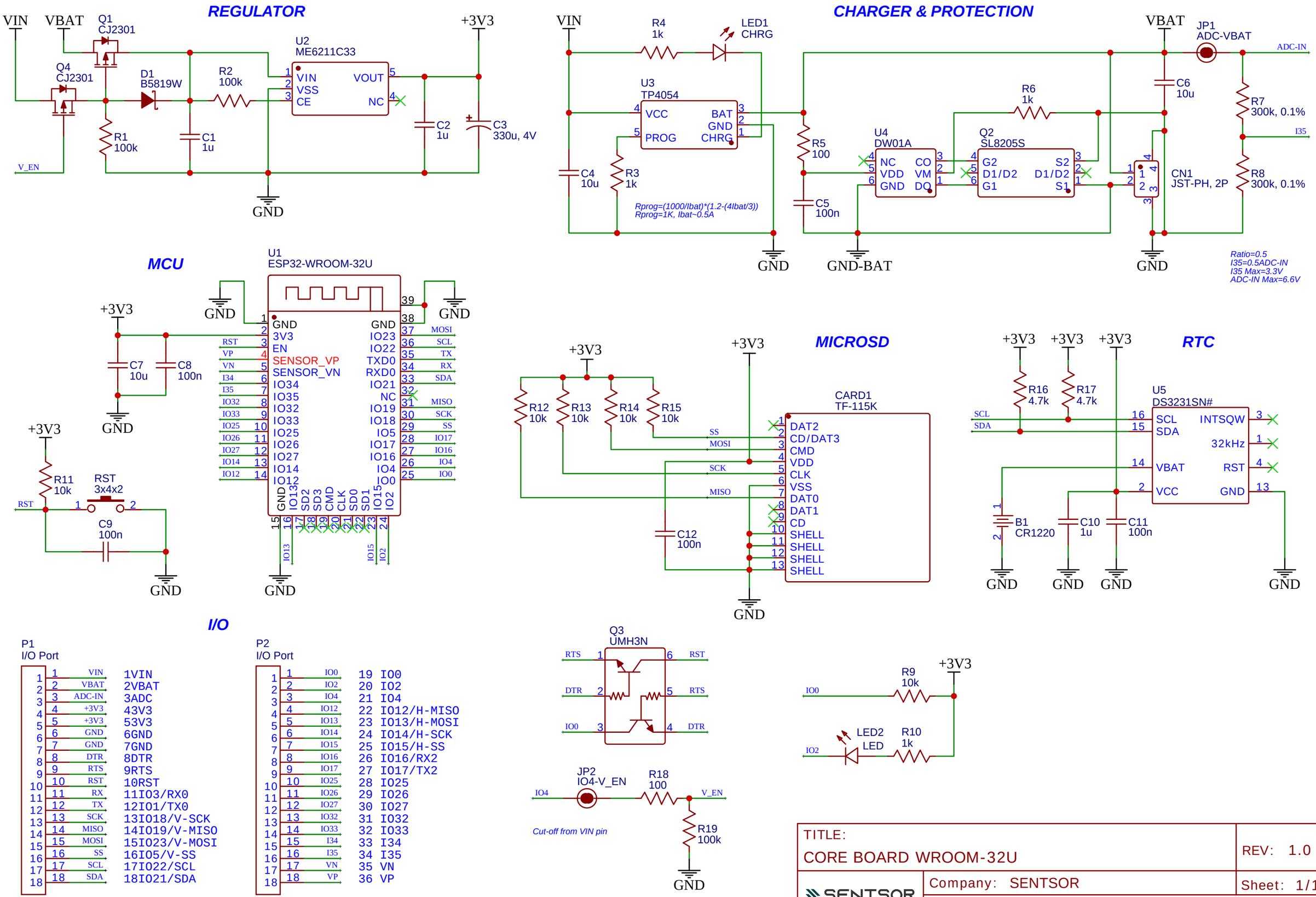
REGULATOR
VIN
VBAT
Q1
CJ2301
Q4
CJ2301
D1
B5819W
R2
100k
R1
100k
C1
1u
U2
ME6211C33
VIN
VSS
CE
VOUT
NC
C2
1u
C3
330u, 4V
+3V3
V_EN
GND
CHARGER & PROTECTION
VIN
R4
1k
LED1
CHRG
U3
TP4054
VCC
PROG
BAT
GND
CHRG
C4
10u
R3
1k
Rprog=(1000/Ibat)*(1.2-(4Ibat/3))
Rprog=1K, Ibat~0.5A
R5
100
C5
100n
U4
DW01A
NC
VDD
GND
CO
VM
DO
R6
1k
Q2
SL8205S
G2
D1/D2
G1
S2
D1/D2
S1
VBAT
JP1
ADC-VBAT
ADC-IN
C6
10u
R7
300k, 0.1%
I35
CN1
JST-PH, 2P
R8
300k, 0.1%
GND
GND-BAT
Ratio=0.5
I35=0.5ADC-IN
I35 Max=3.3V
ADC-IN Max=6.6V
MCU
U1
ESP32-WROOM-32U
+3V3
GND
C7
10u
C8
100n
GND
3V3
EN
SENSOR_VP
SENSOR_VN
IO34
IO35
IO32
IO33
IO25
IO26
IO27
IO14
IO12
IO23
IO22
TXD0
RXD0
IO21
NC
IO19
IO18
IO5
IO17
IO16
IO4
IO0
IO13
SD2
SD3
CMD
CLK
SD0
SD1
IO15
IO2
MOSI
SCL
TX
RX
SDA
MISO
SCK
SS
IO17
IO16
IO4
IO0
+3V3
R11
10k
RST
RST
3x4x2
C9
100n
GND
MICROSD
+3V3
+3V3
R12
10k
R13
10k
R14
10k
R15
10k
CARD1
TF-115K
DAT2
CD/DAT3
CMD
VDD
CLK
VSS
DAT0
DAT1
CD
SHELL
SHELL
SHELL
SHELL
SS
MOSI
SCK
MISO
C12
100n
GND
RTC
+3V3
+3V3
+3V3
R16
4.7k
R17
4.7k
SCL
SDA
U5
DS3231SN#
SCL
SDA
VBAT
VCC
INTSQW
32kHz
RST
GND
B1
CR1220
C10
1u
C11
100n
GND
GND
GND
GND
I/O
P1
I/O Port
1 VIN 1VIN
2 VBAT 2VBAT
3 ADC-IN 3ADC
4 +3V3 43V3
5 +3V3 53V3
6 GND 6GND
7 GND 7GND
8 DTR 8DTR
9 RTS 9RTS
10 RST 10RST
11 RX 11IO3/RX0
12 TX 12IO1/TX0
13 SCK 13IO18/V-SCK
14 MISO 14IO19/V-MISO
15 MOSI 15IO23/V-MOSI
16 SS 16IO5/V-SS
17 SCL 17IO22/SCL
18 SDA 18IO21/SDA
P2
I/O Port
1 IO0 19 IO0
2 IO2 20 IO2
3 IO4 21 IO4
4 IO12 22 IO12/H-MISO
5 IO13 23 IO13/H-MOSI
6 IO14 24 IO14/H-SCK
7 IO15 25 IO15/H-SS
8 IO16 26 IO16/RX2
9 IO17 27 IO17/TX2
10 IO25 28 IO25
11 IO26 29 IO26
12 IO27 30 IO27
13 IO32 31 IO32
14 IO33 32 IO33
15 I34 33 I34
16 I35 34 I35
17 VN 35 VN
18 VP 36 VP
Q3
UMH3N
RTS
DTR
IO0
RST
RTS
DTR
JP2
IO4-V_EN
IO4
R18
100
V_EN
R19
100k
Cut-off from VIN pin
GND
+3V3
R9
10k
IO0
LED2
LED
R10
1k
IO2
TITLE:
CORE BOARD WROOM-32U
REV: 1.0
SENTSOR
Company: SENTSOR
Sheet: 1/1
Date: 2020-03-01
Drawn By: adamalfath