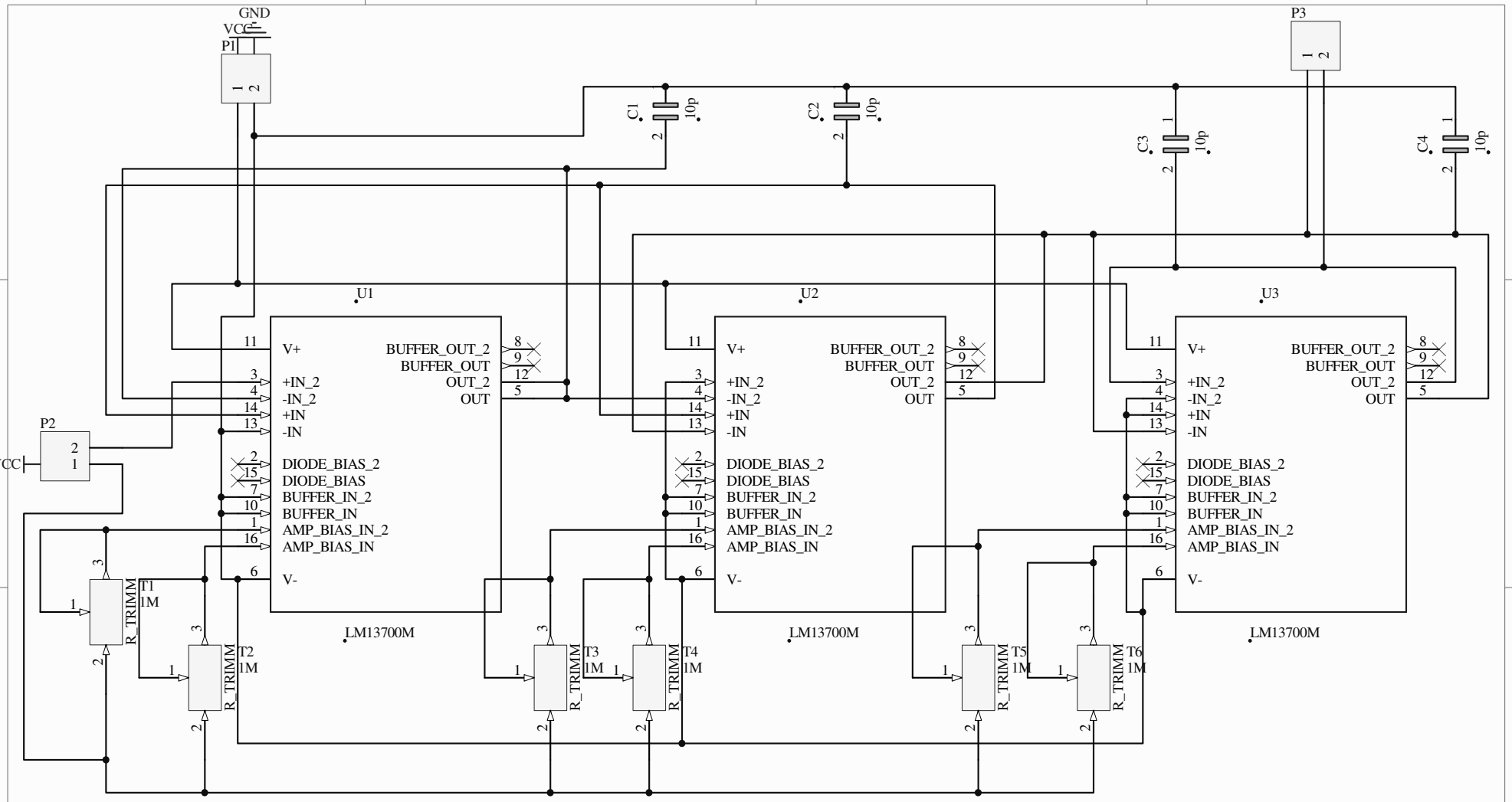

Title		
Size A	Number	Revision
Date: 11/26/2019		Sheet of
File: C:\Users\..\OTA.SchDoc		Drawn By: