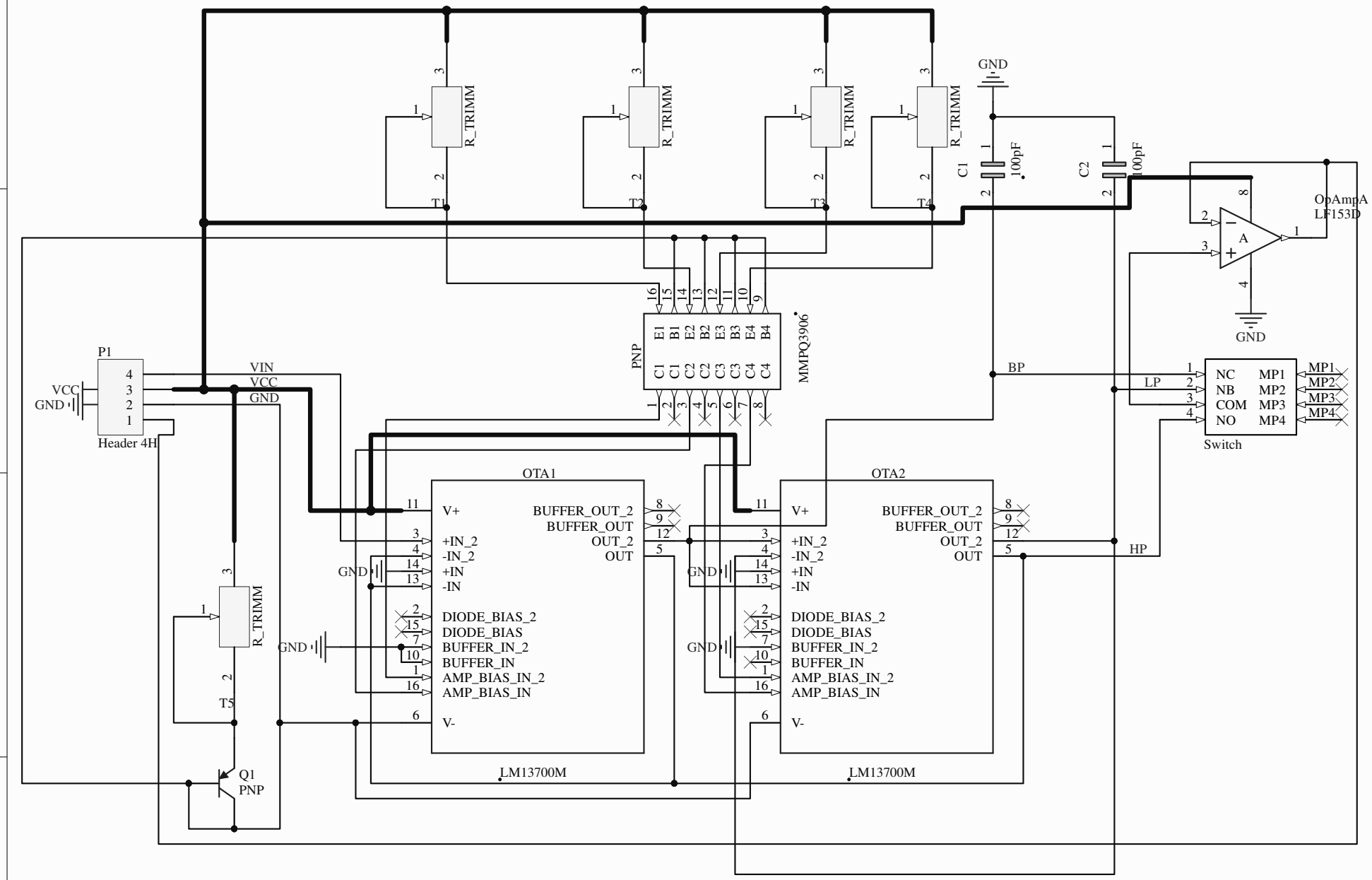

Title		
Size A	Number	Revision
Date: 2/24/2020		Sheet of
File: C:\Users\..\otis_v4.SchDoc		Drawn By:

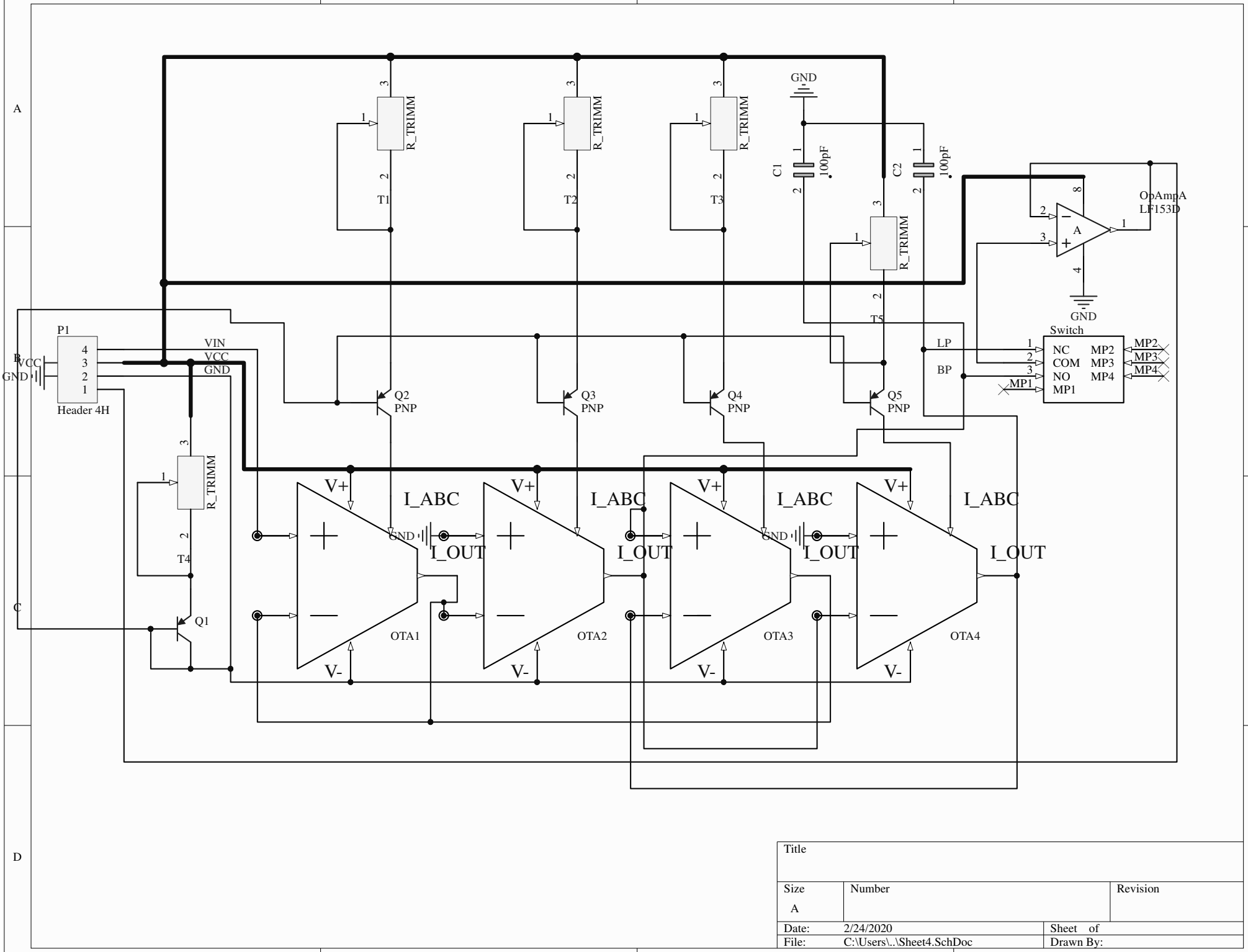

Title		
Size A	Number	Revision
Date: 2/24/2020	Sheet of	
File: C:\Users\..\Sheet4.SchDoc	Drawn By:	