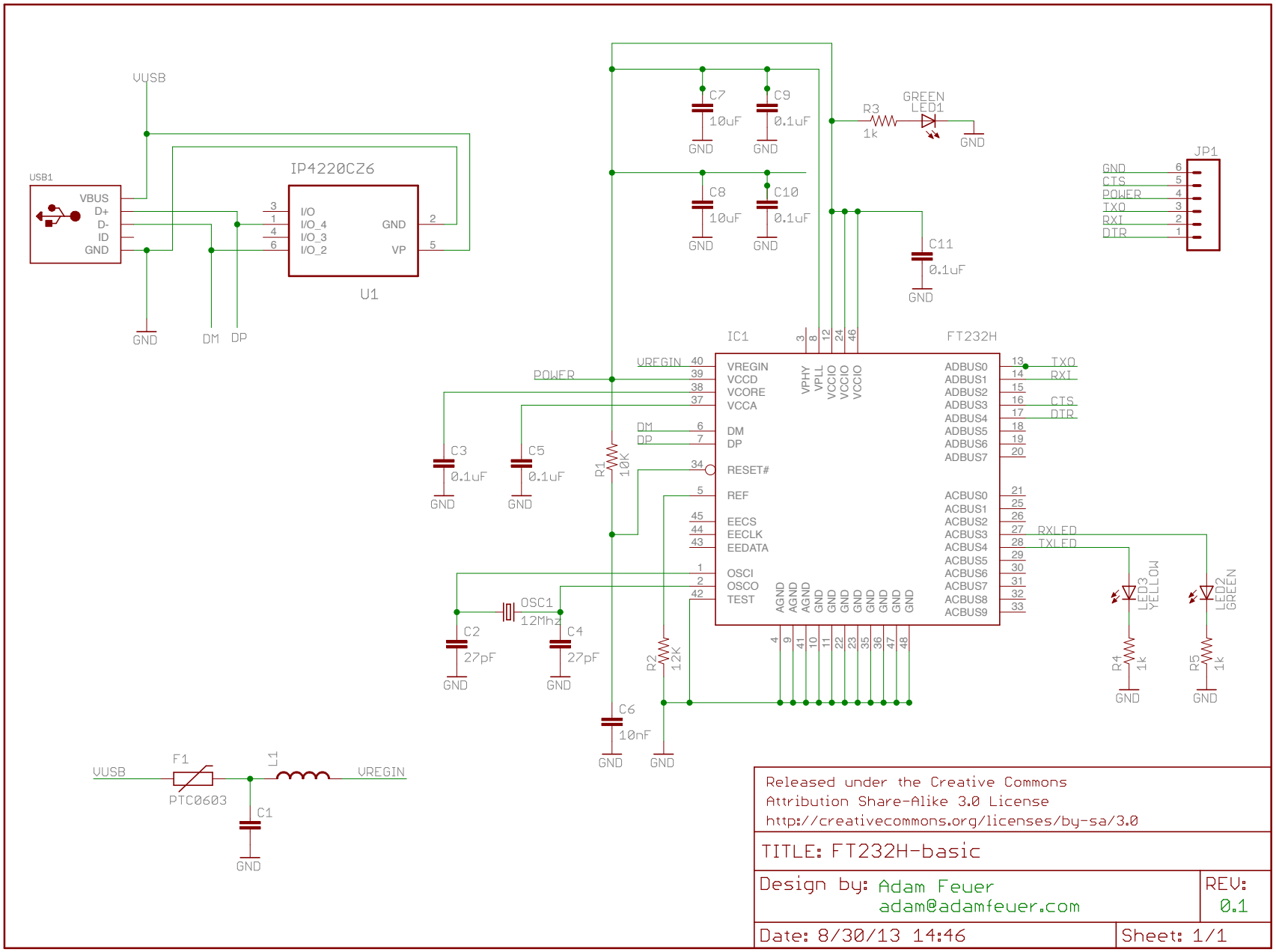

8/30/13 16:38 f=0.90 /Users/adam/Documents/eagle/FT232H-basic/FT232H-basic.sch (Sheet: 1/1)