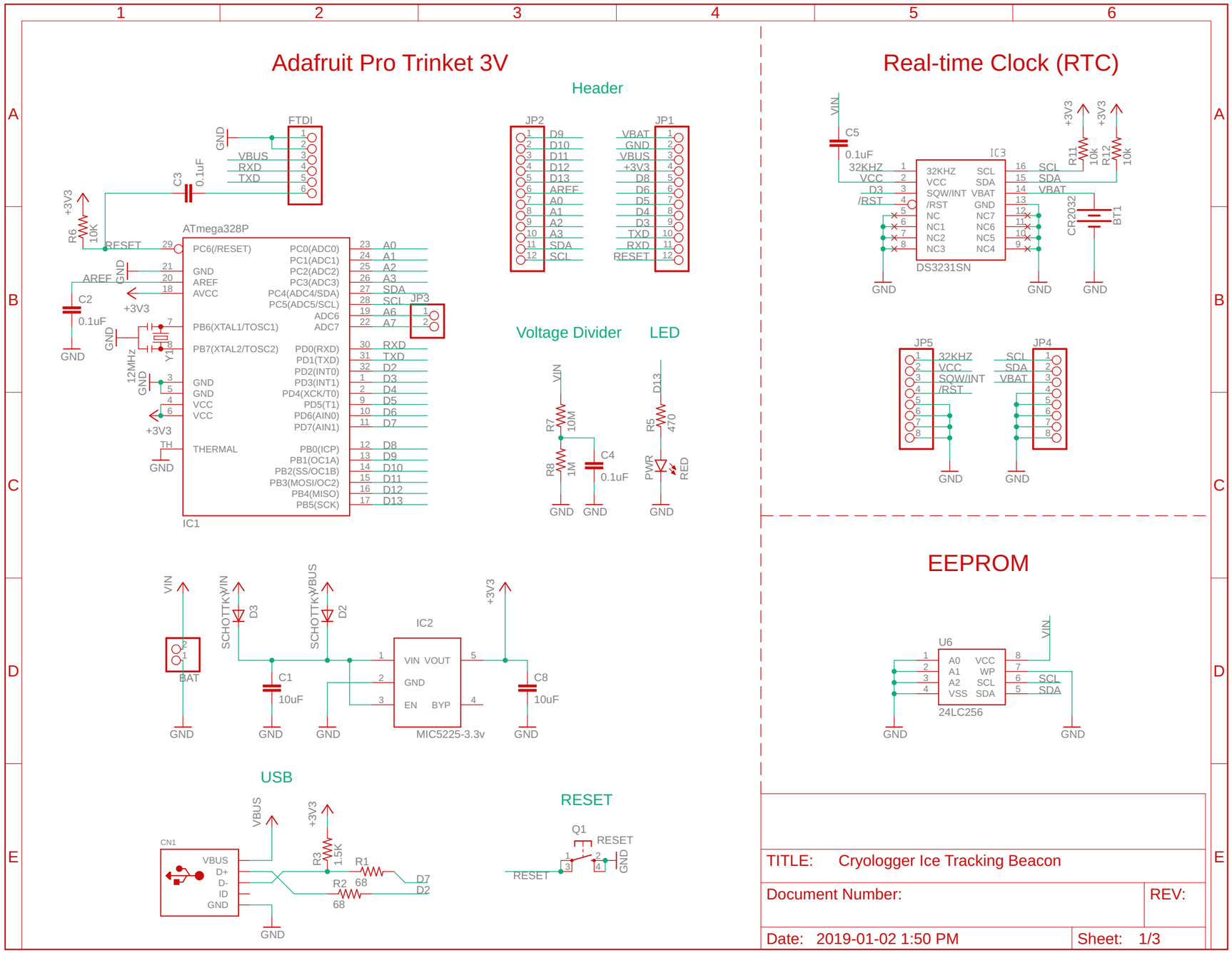
Adafruit Pro Trinket 3V
Header
Real-time Clock (RTC)
EEPROM
Voltage Divider
LED
USB
RESET
FTDI
ATmega328P
IC1
JP2
JP1
JP3
JP5
JP4
IC3
DS3231SN
CR2032
BT1
IC2
MIC5225-3.3v
U6
24LC256
CN1
Q1
TITLE: Cryologger Ice Tracking Beacon
Document Number:
REV:
Date: 2019-01-02 1:50 PM
Sheet: 1/3

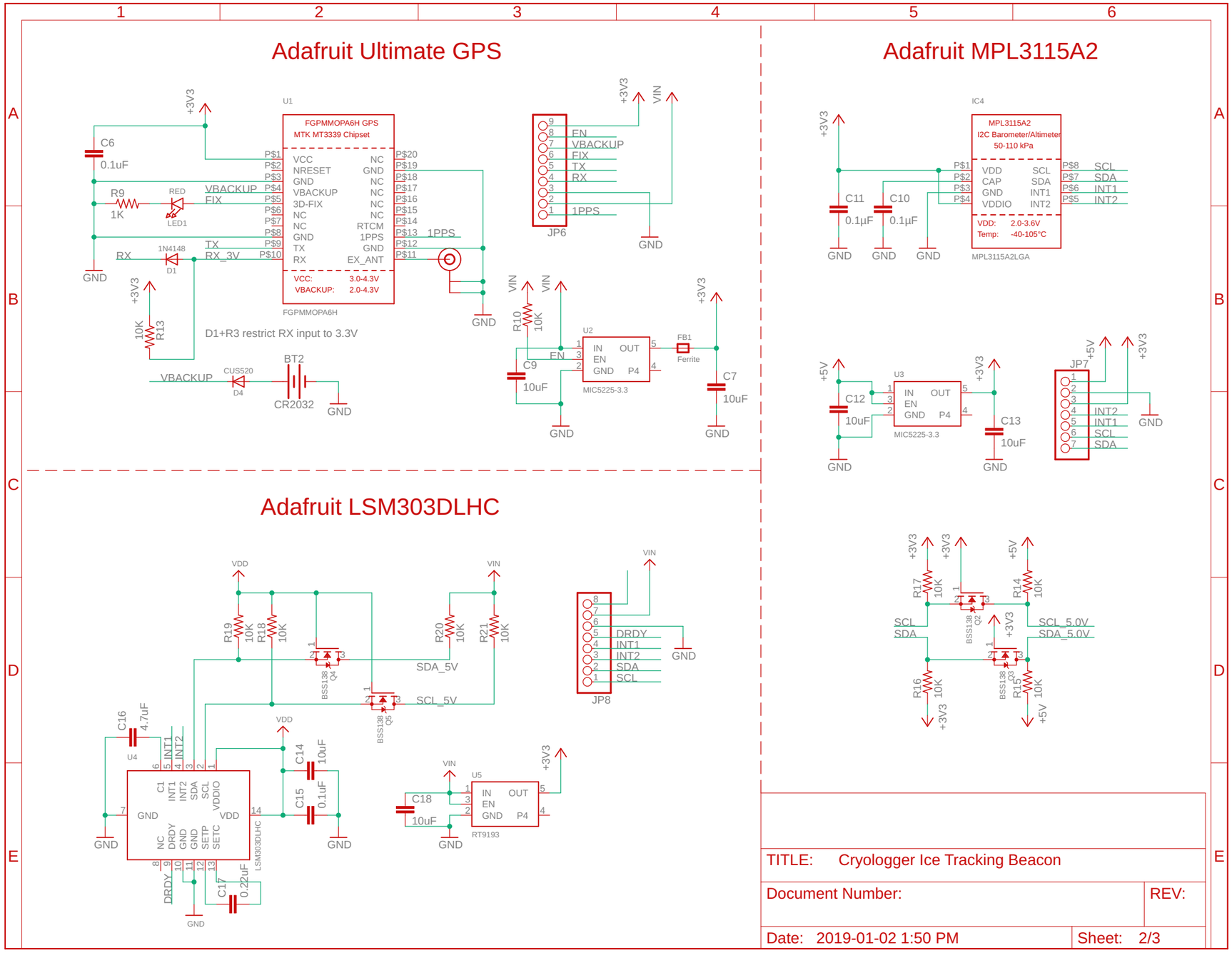

TITLE: Cryologger Ice Tracking Beacon

Document Number:

REV:

Date: 2019-01-02 1:50 PM

Sheet: 2/3

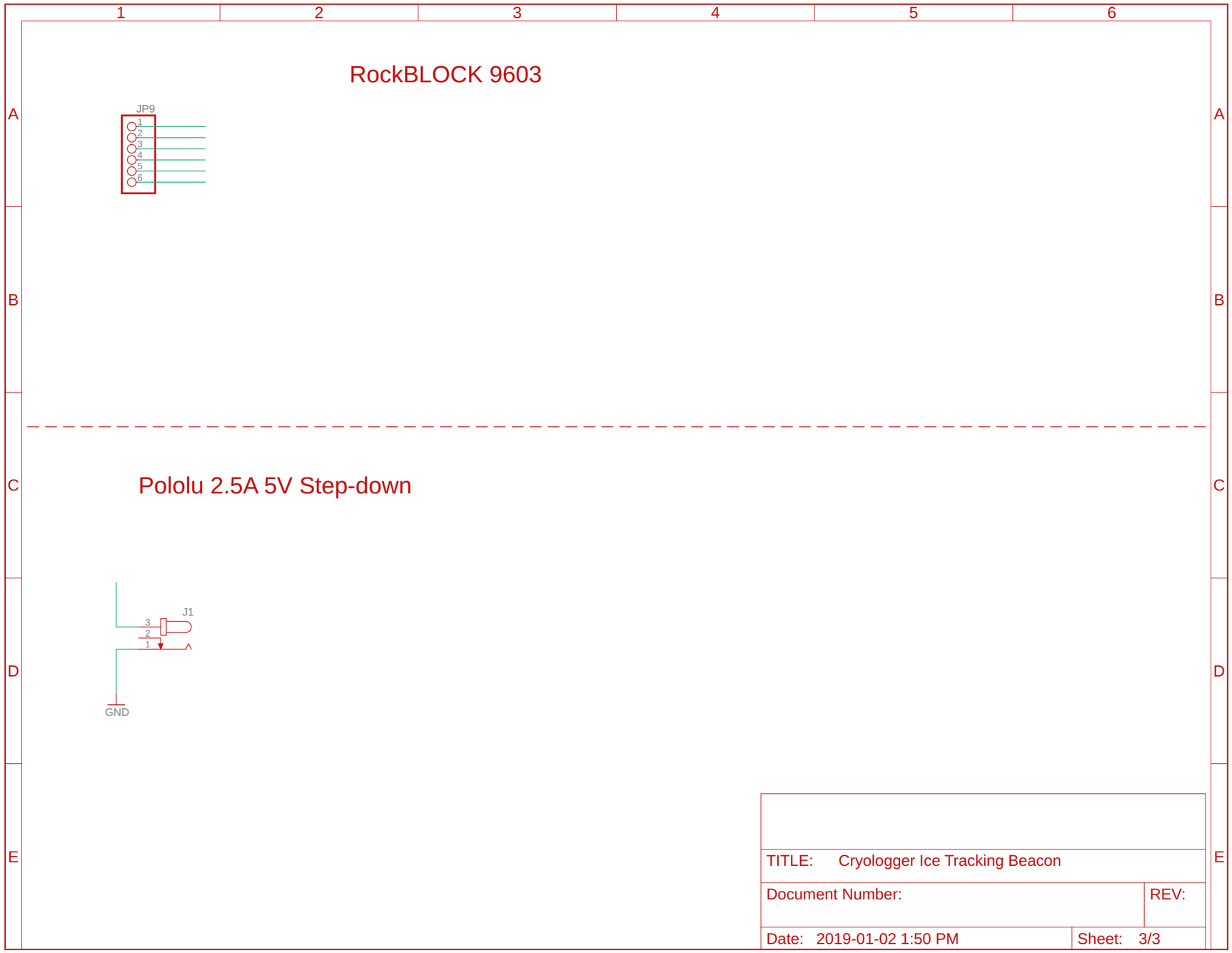
RockBLOCK 9603
JP9
1
2
3
4
5
6
Pololu 2.5A 5V Step-down
J1
3
2
1
GND
TITLE: Cryologger Ice Tracking Beacon
Document Number:
REV:
Date: 2019-01-02 1:50 PM
Sheet: 3/3