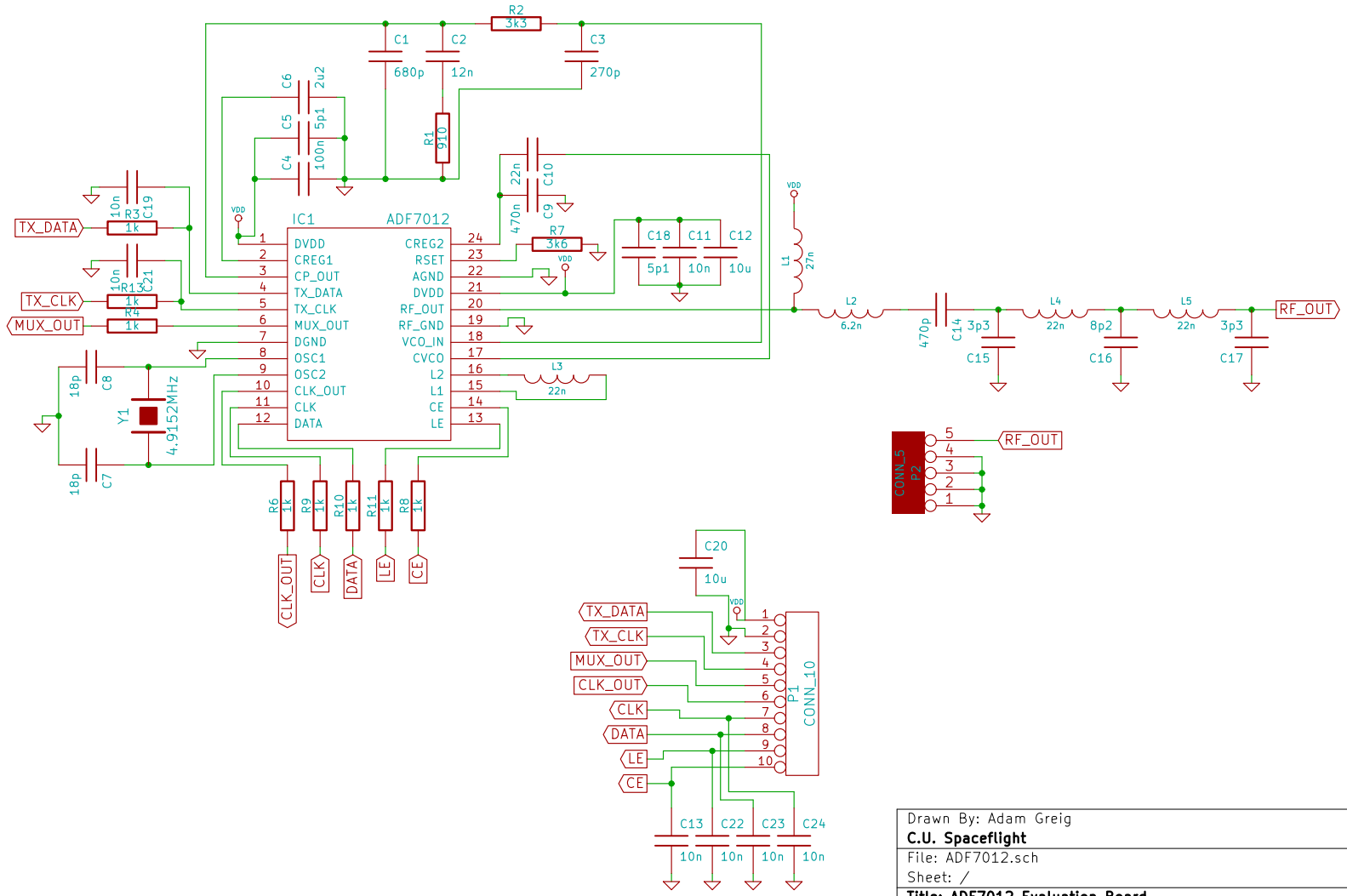

Drawn By: Adam Greig		
C.U. Spaceflight		
File: ADF7012.sch		
Sheet: /		
Title: ADF7012 Evaluation Board		
Size: A4	**Date: 28 may 2011**	**Rev: 1**
KiCad E.D.A.		Id: 1/1