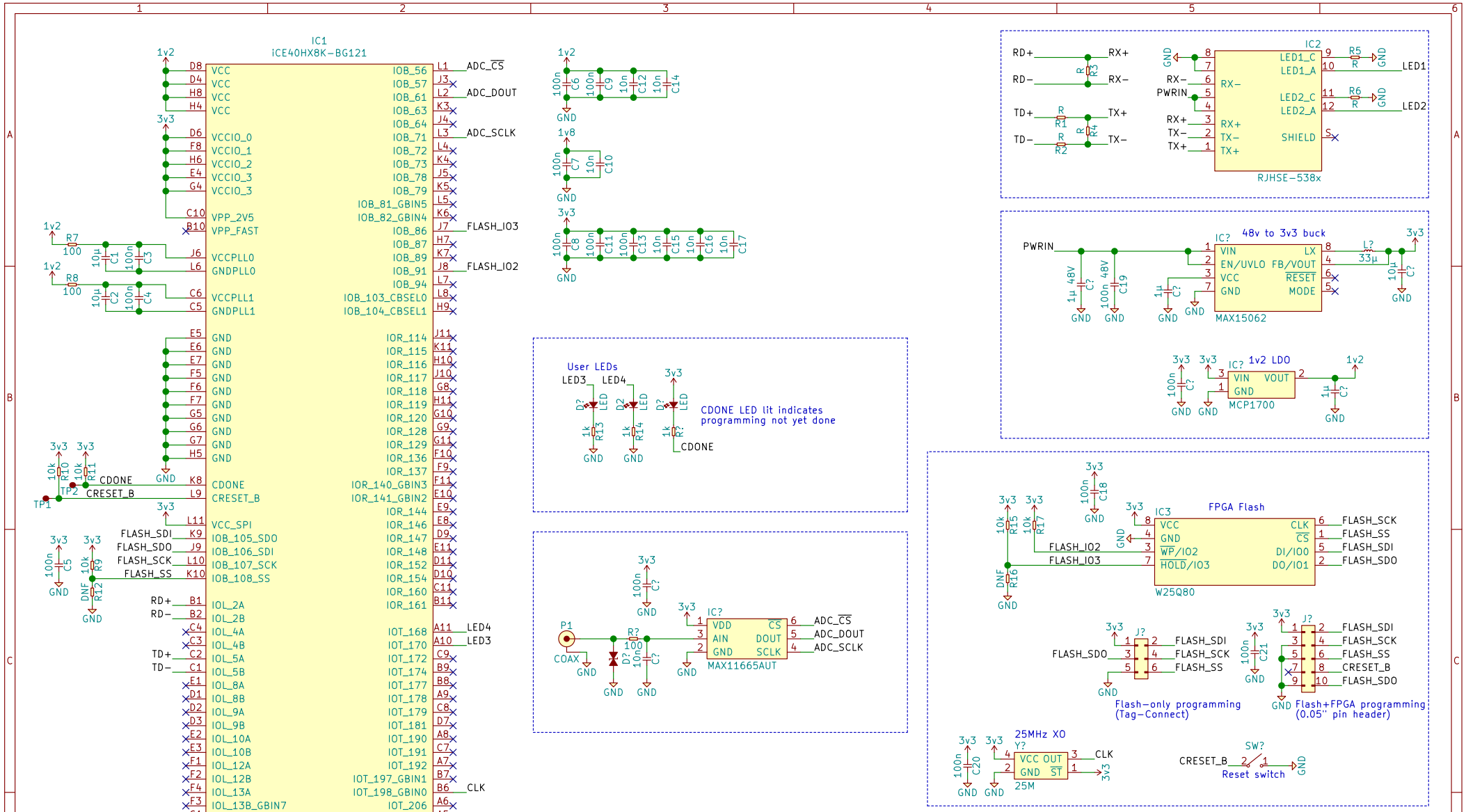

Drawn by: Adam Greig

Sheet: /
File: proto−sensor.sch

Title: TBGe Sensor Prototype

Size: A4	Date: 2018−11−20	Rev: 1
KiCad E.D.A. kicad 6.0.0−rc1−unknown−650478f84ubuntu18.04.1		Id: 1/1