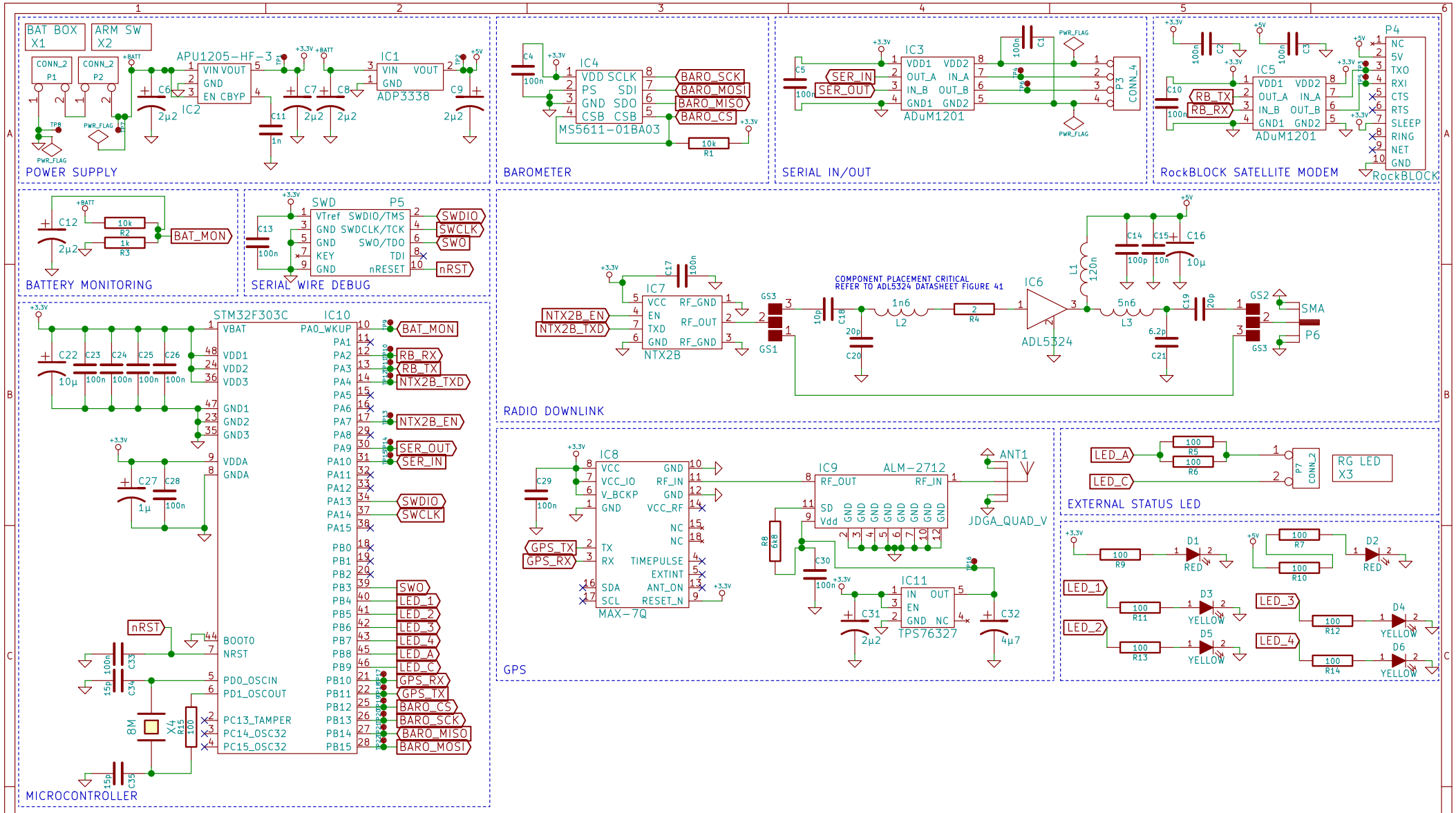


Drawn By: Adam Greig

**Cambridge University Spaceflight**

Sheet: /

File: m2r.sch

***Title: Martlet 2 Radio Board***

| | | |
|---|---|---|
| Size: A4 | Date: 08 May 2014 | **Rev: 1** |
| KiCad E.D.A. eeschema (2014-jan-25)-product | | Id: 1/1 |