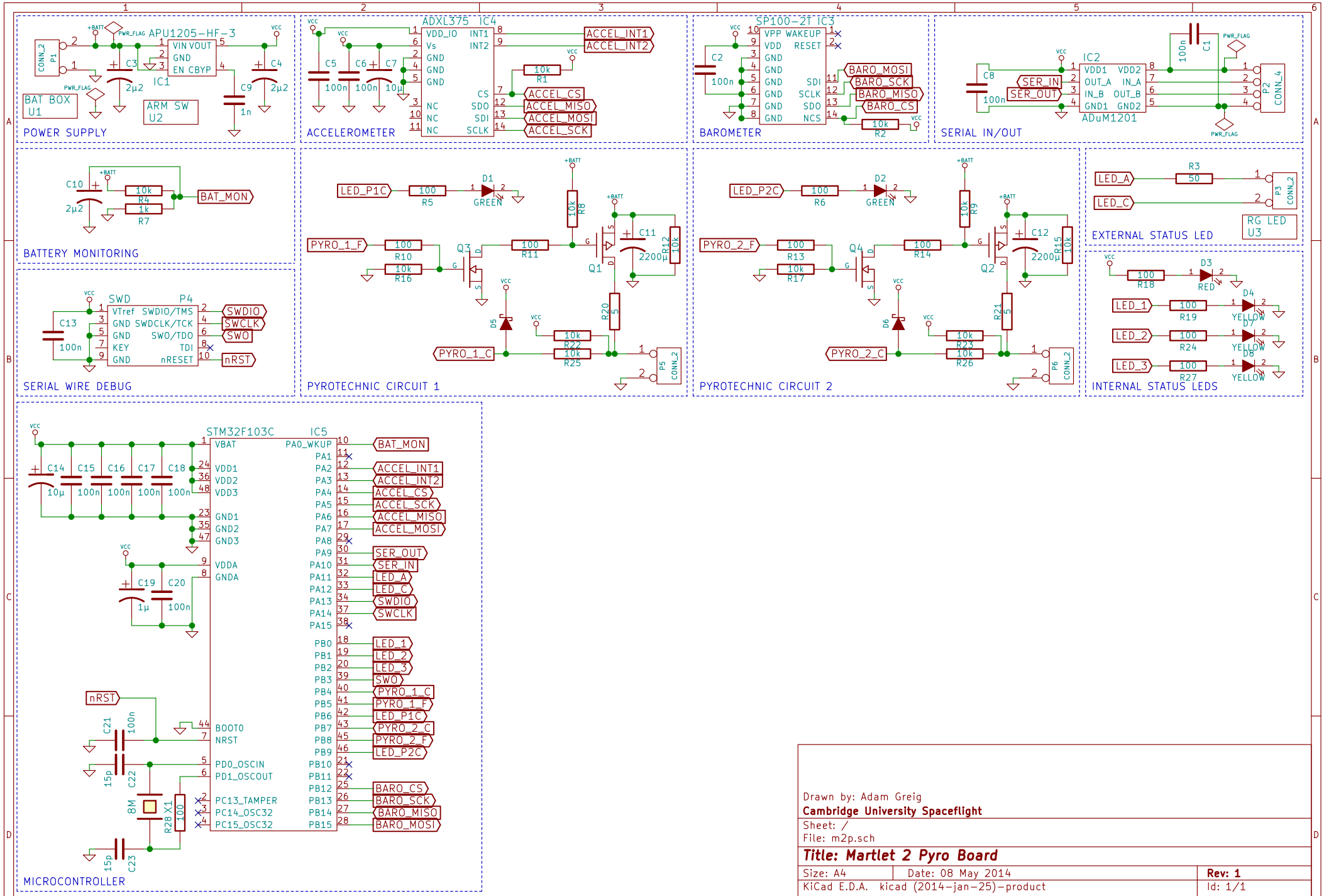
POWER SUPPLY
APU1205-HF-3
IC1
VIN VOUT
GND
EN CBYP
C3 2µ2
C4 2µ2
C9 1n
CONN_2 P1
BAT BOX U1
ARM SW U2
ACCELEROMETER
ADXL375 IC4
VDD_IO INT1
Vs INT2
GND
CS
SDO
SDI
SCLK
NC
C5 100n
C6 100n
C7 10µ
R1 10k
ACCEL_INT1
ACCEL_INT2
ACCEL_CS
ACCEL_MISO
ACCEL_MOSI
ACCEL_SCK
BAROMETER
SP100-2T IC3
VPP WAKEUP
VDD RESET
SDI
SCLK
SDO
NCS
C2 100n
R2 10k
BARO_MOSI
BARO_SCK
BARO_MISO
BARO_CS
SERIAL IN/OUT
IC2
ADuM1201
VDD1 VDD2
OUT_A IN_A
IN_B OUT_B
GND1 GND2
C8 100n
C1 100n
SER_IN
SER_OUT
P2 CONN_4
BATTERY MONITORING
C10 2µ2
R4 10k
R7 1k
BAT_MON
SERIAL WIRE DEBUG
SWD P4
VTref SWDIO/TMS
GND SWDCLK/TCK
GND SWO/TDO
KEY TDI
GND nRESET
C13 100n
SWDIO
SWCLK
SWO
nRST
PYROTECHNIC CIRCUIT 1
LED_P1C
R5 100
D1 GREEN
R8 10k
PYRO_1_F
R10 100
R16 10k
Q3
R11 100
Q1
C11 2200µ
R12 10k
R20 5
D5
R22 10k
R25 10k
PYRO_1_C
P5 CONN_2
PYROTECHNIC CIRCUIT 2
LED_P2C
R6 100
D2 GREEN
R9 10k
PYRO_2_F
R13 100
R17 10k
Q4
R14 100
Q2
C12 2200µ
R15 10k
R21 5
D6
R23 10k
R26 10k
PYRO_2_C
P6 CONN_2
EXTERNAL STATUS LED
LED_A
LED_C
R3 50
P3 CONN_2
RG LED U3
INTERNAL STATUS LEDS
R18 100
D3 RED
LED_1
R19 100
D4 YELLOW
LED_2
R24 100
D7 YELLOW
LED_3
R27 100
D8 YELLOW
MICROCONTROLLER
STM32F103C IC5
VBAT
VDD1
VDD2
VDD3
GND1
GND2
GND3
VDDA
GNDA
C14 10µ
C15 100n
C16 100n
C17 100n
C18 100n
C19 1µ
C20 100n
BOOT0
NRST
PD0_OSCIN
PD1_OSCOUT
PC13_TAMPER
PC14_OSC32
PC15_OSC32
C21 100n
C22 15p
C23 15p
8M X1
R28 100
PA0_WKUP
PA1
PA2
PA3
PA4
PA5
PA6
PA7
PA8
PA9
PA10
PA11
PA12
PA13
PA14
PA15
PB0
PB1
PB2
PB3
PB4
PB5
PB6
PB7
PB8
PB9
PB10
PB11
PB12
PB13
PB14
PB15
SER_OUT
SER_IN
LED_A
LED_C
SWDIO
SWCLK
LED_1
LED_2
LED_3
SWO
PYRO_1_C
PYRO_1_F
LED_P1C
PYRO_2_C
PYRO_2_F
LED_P2C
BARO_CS
BARO_SCK
BARO_MISO
BARO_MOSI
Drawn by: Adam Greig
Cambridge University Spaceflight
Sheet: /
File: m2p.sch
Title: Martlet 2 Pyro Board
Size: A4
Date: 08 May 2014
Rev: 1
KiCad E.D.A. kicad (2014-jan-25)-product
Id: 1/1