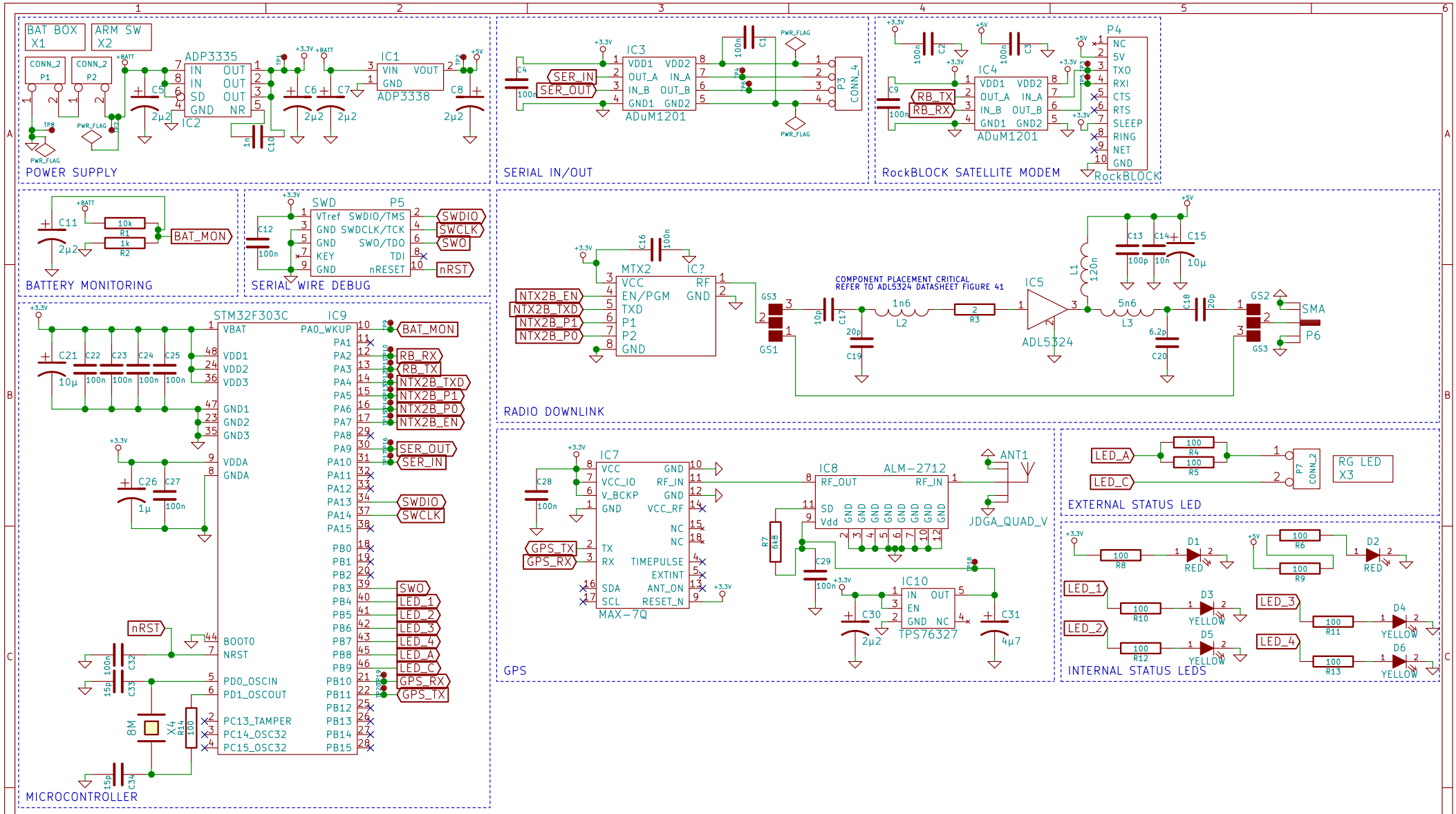
POWER SUPPLY
BAT BOX X1
ARM SW X2
CONN_2 P1
CONN_2 P2
ADP3335 IC2
IC1 ADP3338
SERIAL IN/OUT
IC3 ADuM1201
SER_IN
SER_OUT
P3 CONN_4
RockBLOCK SATELLITE MODEM
IC4 ADuM1201
RB_TX
RB_RX
P4 RockBLOCK
BATTERY MONITORING
BAT_MON
SERIAL WIRE DEBUG
SWD P5
SWDIO
SWCLK
SWO
nRST
RADIO DOWNLINK
MTX2 IC?
NTX2B_EN
NTX2B_TXD
NTX2B_P1
NTX2B_P0
COMPONENT PLACEMENT CRITICAL
REFER TO ADL5324 DATASHEET FIGURE 41
IC5 ADL5324
SMA P6
MICROCONTROLLER
STM32F303C IC9
GPS
IC7 MAX-7Q
GPS_TX
GPS_RX
IC8 ALM-2712
ANT1
JDGA_QUAD_V
IC10 TPS76327
EXTERNAL STATUS LED
LED_A
LED_C
RG LED X3
INTERNAL STATUS LEDS
LED_1
LED_2
LED_3
LED_4
LED_A
LED_C
Drawn By: Adam Greig
Cambridge University Spaceflight
Sheet: /
File: m2r.sch
Title: Martlet 2 Radio Board
Size: A4
Date: 08 May 2014
Rev: 1
KiCad E.D.A. eeschema (2014-jan-25)-product
Id: 1/1