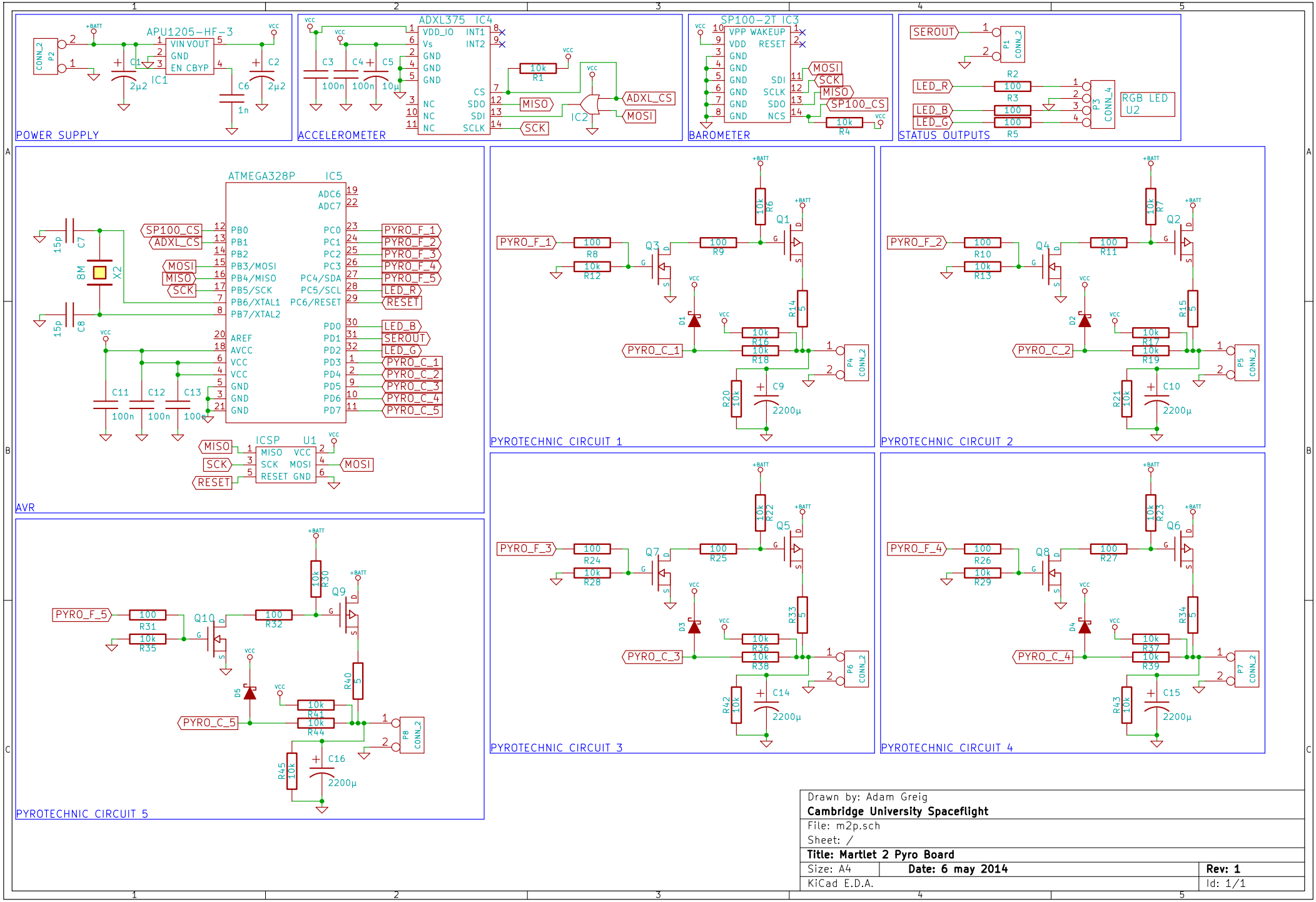

Drawn by: Adam Greig		
Cambridge University Spaceflight		
File: m2p.sch		
Sheet: /		
Title: Martlet 2 Pyro Board		
Size: A4	**Date: 6 may 2014**	**Rev: 1**
KiCad E.D.A.		Id: 1/1