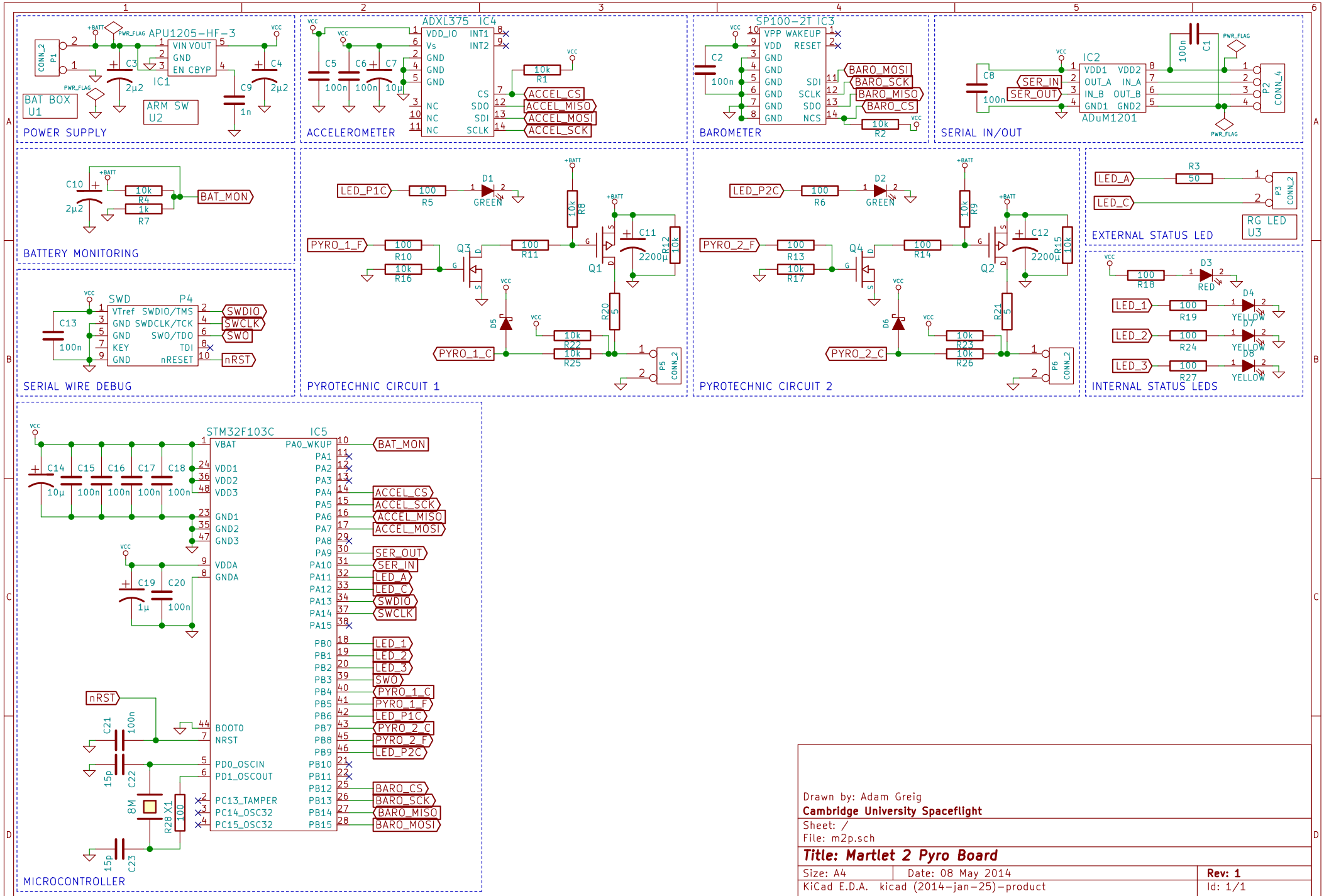
POWER SUPPLY
APU1205-HF-3
IC1
CONN_2 P1
BAT BOX U1
ARM SW U2
ACCELEROMETER
ADXL375 IC4
VDD_IO INT1 Vs INT2 GND GND GND CS SDO SDI SCLK NC NC NC
ACCEL_CS
ACCEL_MISO
ACCEL_MOSI
ACCEL_SCK
BAROMETER
SP100-2T IC3
VPP WAKEUP VDD RESET GND GND GND SDI GND SCLK GND SDO GND NCS
BARO_MOSI
BARO_SCK
BARO_MISO
BARO_CS
SERIAL IN/OUT
IC2
ADuM1201
VDD1 VDD2 OUT_A IN_A IN_B OUT_B GND1 GND2
SER_IN
SER_OUT
CONN_4 P2
BATTERY MONITORING
BAT_MON
SERIAL WIRE DEBUG
SWD P4
VTref SWDIO/TMS GND SWDCLK/TCK GND SWO/TDO KEY TDI GND nRESET
SWDIO
SWCLK
SWO
nRST
PYROTECHNIC CIRCUIT 1
LED_P1C
PYRO_1_F
PYRO_1_C
GREEN
PYROTECHNIC CIRCUIT 2
LED_P2C
PYRO_2_F
PYRO_2_C
GREEN
EXTERNAL STATUS LED
LED_A
LED_C
RG LED U3
INTERNAL STATUS LEDS
LED_1
LED_2
LED_3
RED
YELLOW
MICROCONTROLLER
STM32F103C IC5
VBAT VDD1 VDD2 VDD3 GND1 GND2 GND3 VDDA GNDA BOOT0 NRST PD0_OSCIN PD1_OSCOUT PC13_TAMPER PC14_OSC32 PC15_OSC32
PA0_WKUP PA1 PA2 PA3 PA4 PA5 PA6 PA7 PA8 PA9 PA10 PA11 PA12 PA13 PA14 PA15
PB0 PB1 PB2 PB3 PB4 PB5 PB6 PB7 PB8 PB9 PB10 PB11 PB12 PB13 PB14 PB15
Drawn by: Adam Greig
Cambridge University Spaceflight
Sheet: /
File: m2p.sch
Title: Martlet 2 Pyro Board
Size: A4
Date: 08 May 2014
Rev: 1
KiCad E.D.A. kicad (2014-jan-25)-product
Id: 1/1