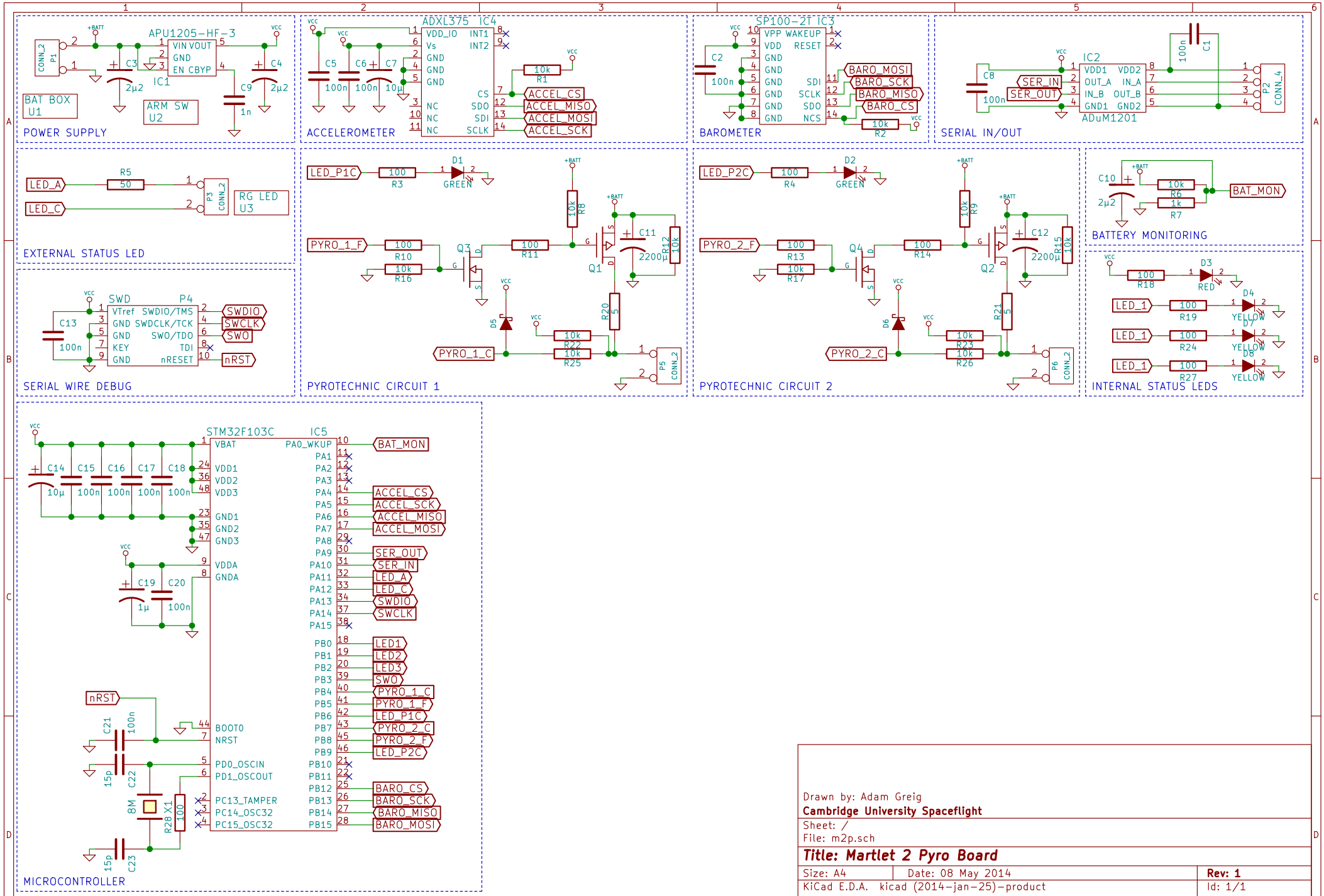
POWER SUPPLY
APU1205-HF-3
IC1
BAT BOX U1
ARM SW U2
ACCELEROMETER
ADXL375 IC4
BAROMETER
SP100-2T IC3
SERIAL IN/OUT
IC2
ADuM1201
EXTERNAL STATUS LED
RG LED U3
SERIAL WIRE DEBUG
SWD P4
PYROTECHNIC CIRCUIT 1
PYROTECHNIC CIRCUIT 2
BATTERY MONITORING
INTERNAL STATUS LEDS
MICROCONTROLLER
STM32F103C IC5
Drawn by: Adam Greig
Cambridge University Spaceflight
Sheet: /
File: m2p.sch
Title: Martlet 2 Pyro Board
Size: A4
Date: 08 May 2014
Rev: 1
KiCad E.D.A. kicad (2014-jan-25)-product
Id: 1/1