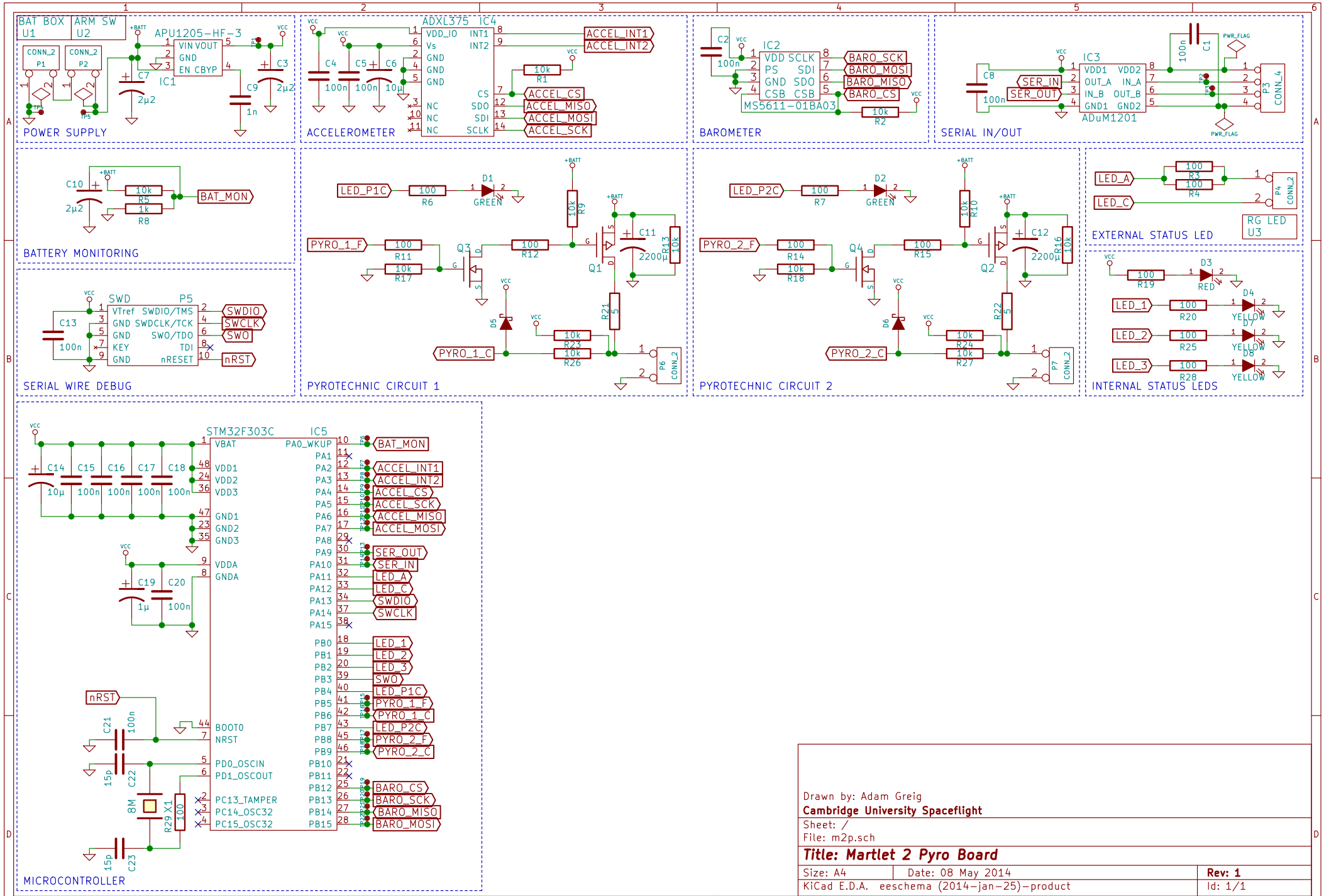

Drawn by: Adam Greig
Cambridge University Spaceflight
Sheet: /
File: m2p.sch

Title: Martlet 2 Pyro Board

Size: A4	Date: 08 May 2014	**Rev: 1**
KiCad E.D.A. eeschema (2014-jan-25)-product		Id: 1/1