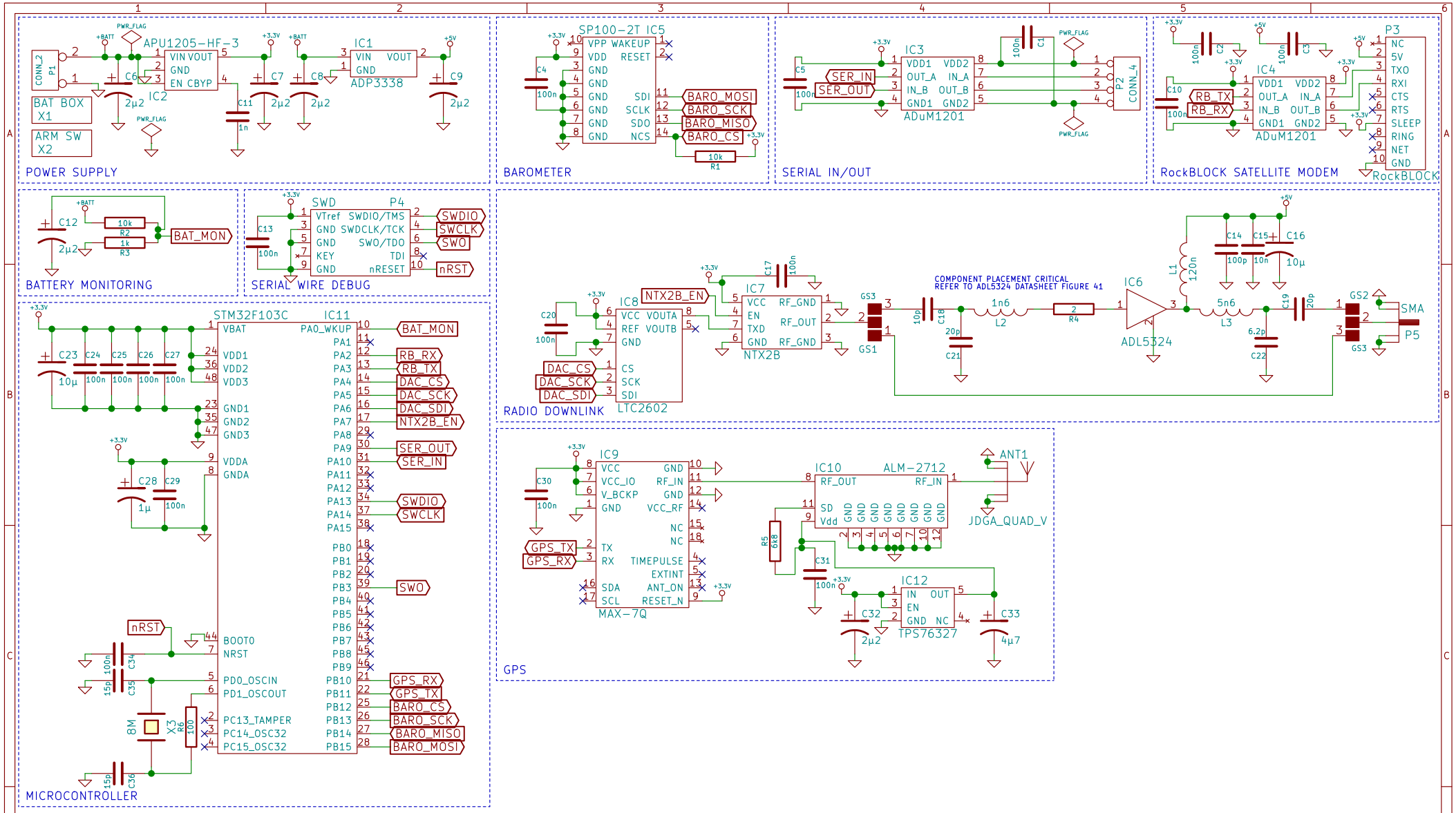

Drawn By: Adam Greig

Cambridge University Spaceflight

Sheet: /

File: m2r.sch

Title: Martlet 2 Radio Board

Size: A4	Date: 08 May 2014	**Rev: 1**
KiCad E.D.A. eeschema (2014-jan-25)-product		Id: 1/1