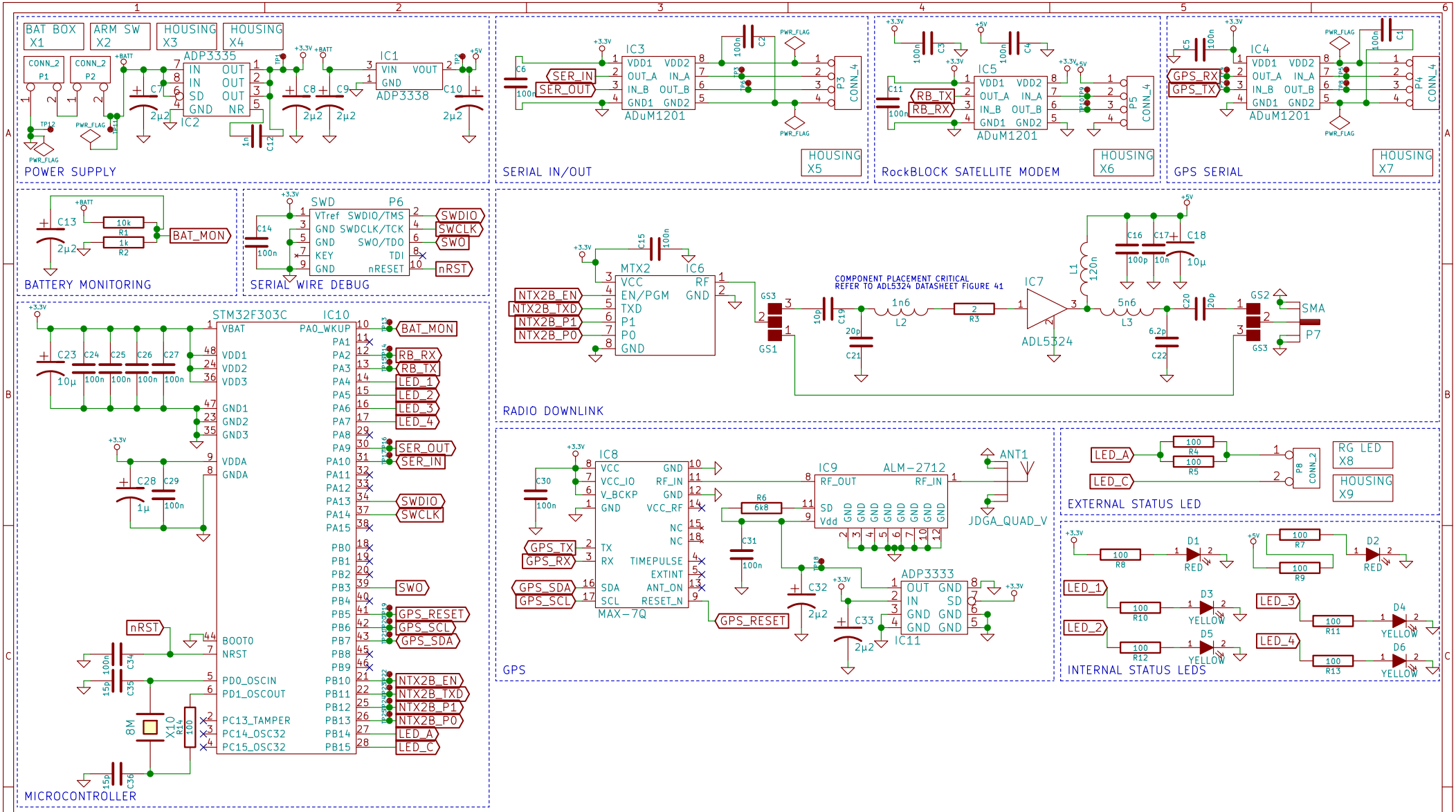
POWER SUPPLY
BAT BOX X1
ARM SW X2
HOUSING X3
HOUSING X4
ADP3335
ADP3338
SERIAL IN/OUT
IC3
ADuM1201
HOUSING X5
RockBLOCK SATELLITE MODEM
IC5
HOUSING X6
GPS SERIAL
IC4
HOUSING X7
BATTERY MONITORING
SERIAL WIRE DEBUG
SWD
P6
RADIO DOWNLINK
MTX2
IC6
COMPONENT PLACEMENT CRITICAL
REFER TO ADL5324 DATASHEET FIGURE 41
IC7
ADL5324
SMA
P7
MICROCONTROLLER
STM32F303C
IC10
GPS
IC8
MAX-7Q
IC9
ALM-2712
ANT1
JDGA_QUAD_V
ADP3333
IC11
EXTERNAL STATUS LED
RG LED X8
HOUSING X9
INTERNAL STATUS LEDS
Drawn By: Adam Greig
Cambridge University Spaceflight
Sheet: /
File: m2r.sch
Title: Martlet 2 Radio Board
Size: A4
Date: 08 May 2014
Rev: 1
KiCad E.D.A. kicad (2014-jan-25)-product
Id: 1/1