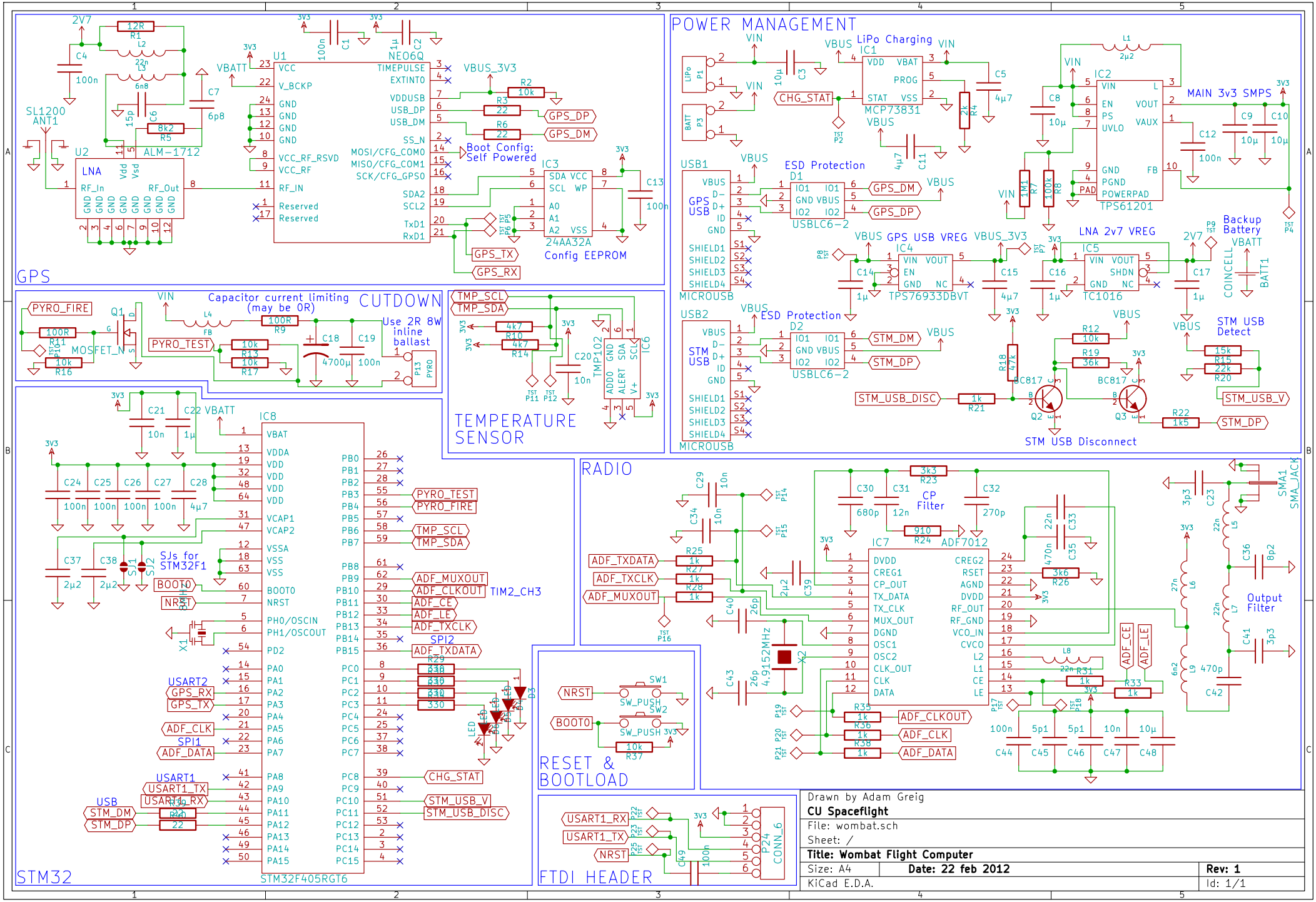

Drawn by Adam Greig

CU Spaceflight

File: wombat.sch

Sheet: /

Title: Wombat Flight Computer

Size: A4	**Date: 22 feb 2012**	**Rev: 1**
KiCad E.D.A.		Id: 1/1