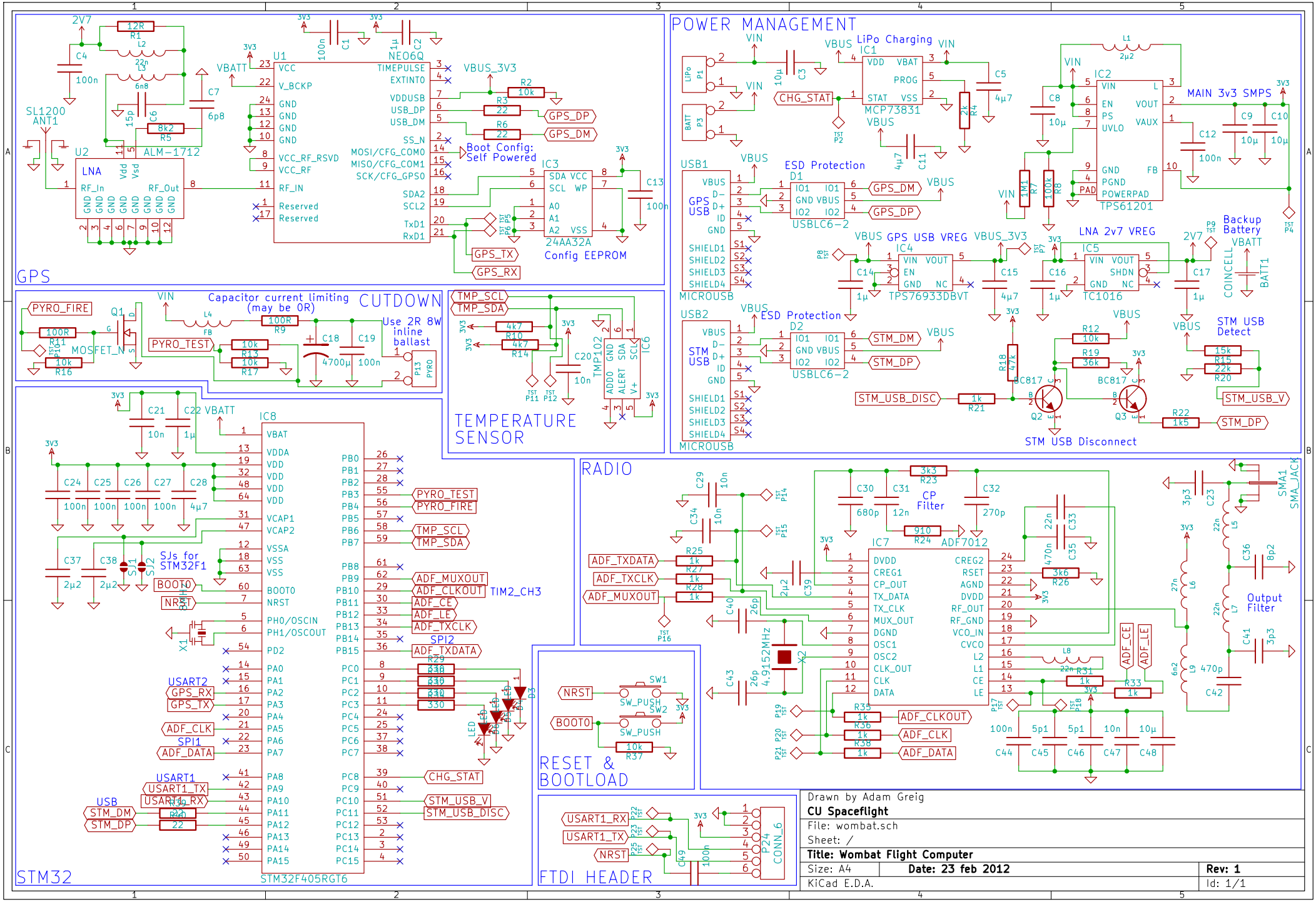
GPS
U1
NEO6Q
U2
ALM-1712
SL1200
ANT1
LNA
IC3
24AA32A
Config EEPROM
Boot Config:
Self Powered
POWER MANAGEMENT
LiPo Charging
IC1
MCP73831
IC2
TPS61201
MAIN 3v3 SMPS
USB1
MICROUSB
ESD Protection
USBLC6-2
IC4
TPS76933DBVT
GPS USB VREG
IC5
TC1016
LNA 2v7 VREG
Backup
Battery
COINCELL
USB2
STM USB
STM USB Detect
STM USB Disconnect
CUTDOWN
Capacitor current limiting
(may be 0R)
Use 2R 8W
inline
ballast
TEMPERATURE
SENSOR
TMP102
RADIO
ADF7012
CP
Filter
Output
Filter
SMA1
SMA_JACK
STM32
STM32F405RGT6
SJs for
STM32F1
USART2
USART1
USB
SPI1
SPI2
TIM2_CH3
RESET &
BOOTLOAD
FTDI HEADER
CONN_6
Drawn by Adam Greig
CU Spaceflight
File: wombat.sch
Sheet: /
Title: Wombat Flight Computer
Size: A4
Date: 23 feb 2012
Rev: 1
KiCad E.D.A.
Id: 1/1