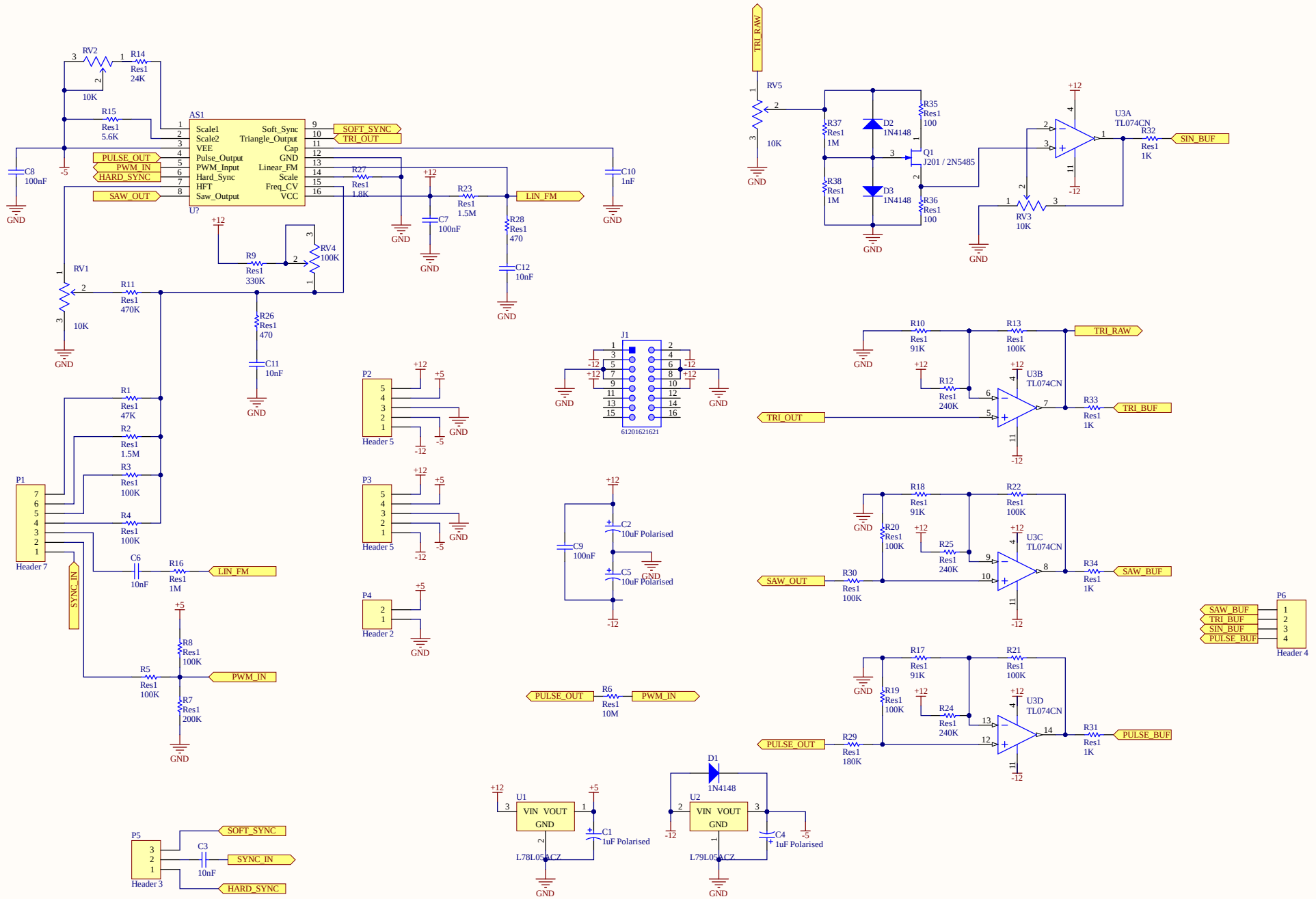

Title		
VCO		
Size A3	Number	Revision
Date: 4/13/2023	Sheet of	
File: C:\Users\..\VCO.SchDoc	Drawn By: Adam Hemer	