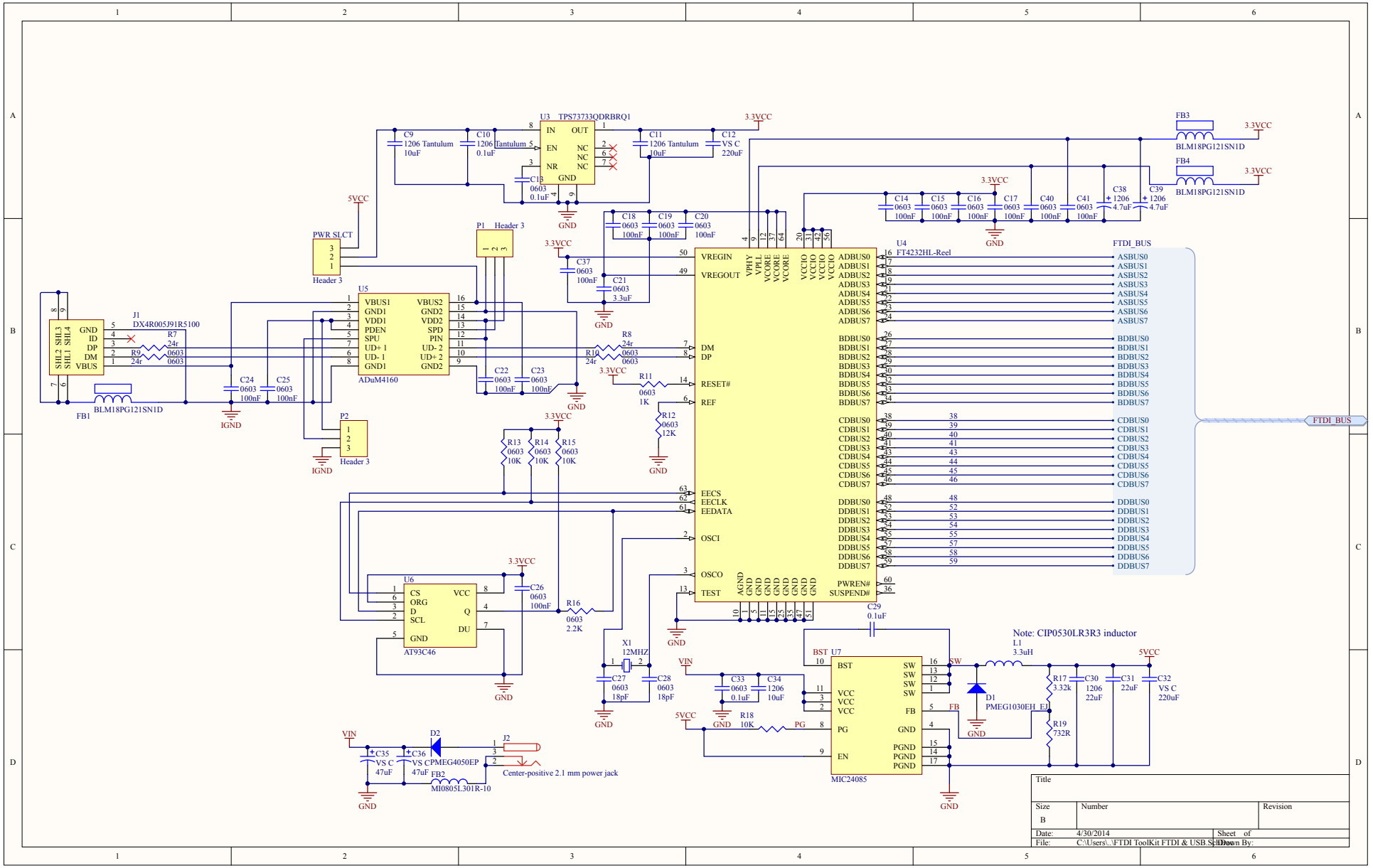
U3 TPS73733QDRBRQ1
IN OUT
EN NC
NR GND
C9 1206 Tantulum 10uF
C10 1206 Tantulum 0.1uF
C11 1206 Tantulum 10uF
C12 VS C 220uF
C13 0603 0.1uF
3.3VCC
5VCC
GND
FB3 BLM18PG121SN1D
FB4 BLM18PG121SN1D
C14 0603 100nF
C15 0603 100nF
C16 0603 100nF
C17 0603 100nF
C40 0603 100nF
C41 0603 100nF
C38 1206 4.7uF
C39 1206 4.7uF
PWR SLCT
Header 3
P1 Header 3
C18 0603 100nF
C19 0603 100nF
C20 0603 100nF
C37 0603 100nF
C21 0603 3.3uF
U4 FT4232HL-Reel
VREGIN
VREGOUT
VPHY
VPLL
VCORE
VCORE
VCORE
VCCIO
VCCIO
VCCIO
VCCIO
ADBUS0
ADBUS1
ADBUS2
ADBUS3
ADBUS4
ADBUS5
ADBUS6
ADBUS7
BDBUS0
BDBUS1
BDBUS2
BDBUS3
BDBUS4
BDBUS5
BDBUS6
BDBUS7
CDBUS0
CDBUS1
CDBUS2
CDBUS3
CDBUS4
CDBUS5
CDBUS6
CDBUS7
DDBUS0
DDBUS1
DDBUS2
DDBUS3
DDBUS4
DDBUS5
DDBUS6
DDBUS7
DM
DP
RESET#
REF
EECS
EECLK
EEDATA
OSCI
OSCO
TEST
AGND
PWREN#
SUSPEND#
FTDI_BUS
U5
VBUS1 VBUS2
GND1 GND2
VDD1 VDD2
PDEN SPD
SPU PIN
UD+ 1 UD- 2
UD- 1 UD+ 2
GND1 GND2
ADuM4160
J1
DX4R005J91R5100
SHL2 SHL3 SHL1 SHL4
GND ID DP DM VBUS
R7 24r 0603
R9 24r 0603
R8 24r 0603
R10 24r 0603
C22 0603 100nF
C23 0603 100nF
C24 0603 100nF
C25 0603 100nF
FB1 BLM18PG121SN1D
IGND
P2 Header 3
R11 0603 1K
R12 0603 12K
R13 0603 10K
R14 0603 10K
R15 0603 10K
U6
CS VCC
ORG Q
D DU
SCL
GND
AT93C46
C26 0603 100nF
R16 0603 2.2K
X1 12MHZ
C27 0603 18pF
C28 0603 18pF
C29 0.1uF
Note: CIP0530LR3R3 inductor
L1 3.3uH
BST U7
BST SW
VCC FB
PG GND
EN PGND
MIC24085
C33 0603 0.1uF
C34 1206 10uF
R18 10K
PG
VIN
SW
FB
D1 PMEG1030EH_EJ
R17 3.32k
R19 732R
C30 1206 22uF
C31 22uF
C32 VS C 220uF
C35 VS C 47uF
C36 VS C 47uF
D2 PMEG4050EP
FB2 MI0805L301R-10
J2
Center-positive 2.1 mm power jack
Title
Size B
Number
Revision
Date: 4/30/2014
Sheet of
File: C:\Users\..\FTDI ToolKit FTDI & USB.SchDoc
Drawn By:

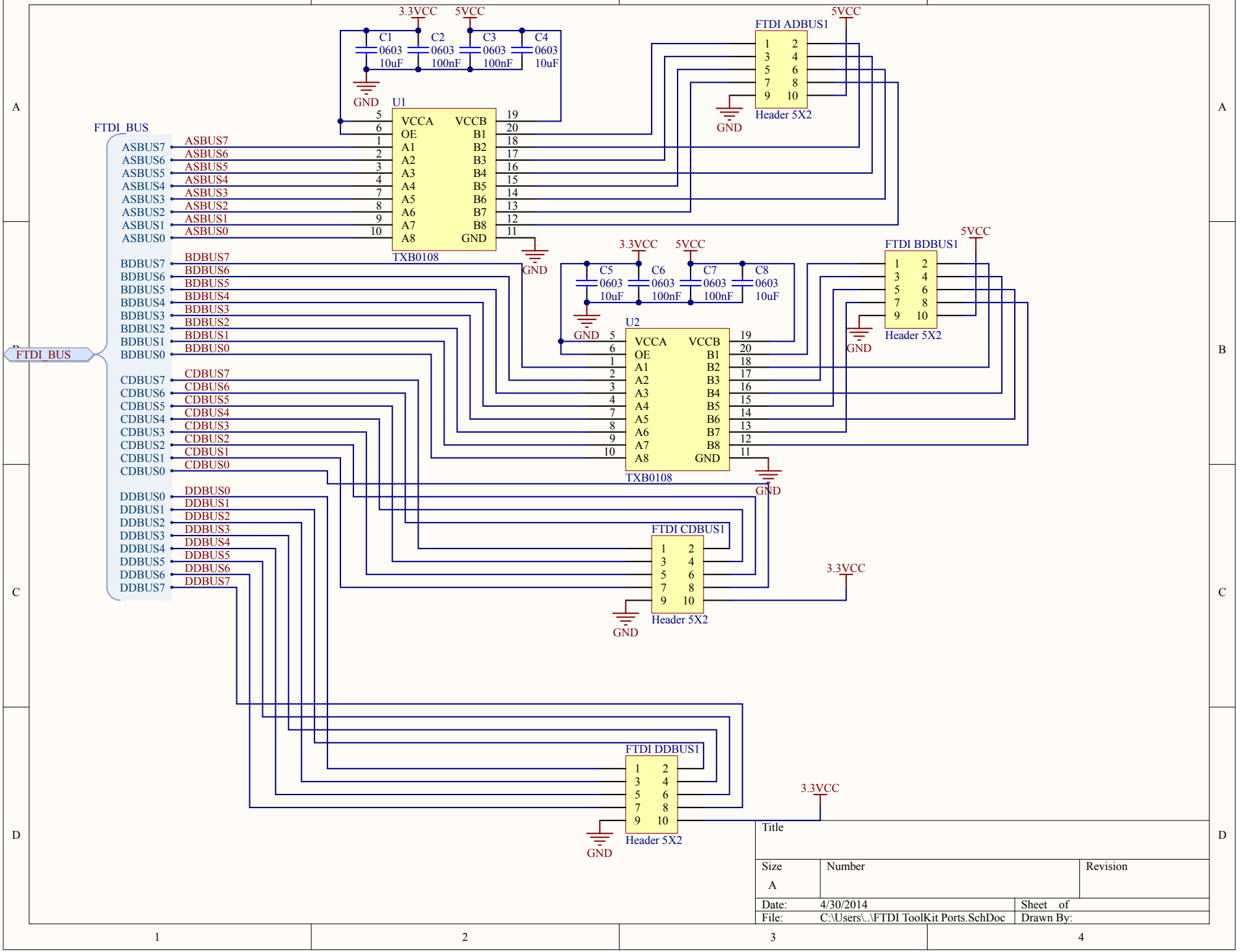
3.3VCC
5VCC
C1 0603 10uF
C2 0603 100nF
C3 0603 100nF
C4 0603 10uF
GND
U1
VCCA VCCB
OE
A1 B1
A2 B2
A3 B3
A4 B4
A5 B5
A6 B6
A7 B7
A8 B8
GND
TXB0108
FTDI ADBUS1
Header 5X2
FTDI_BUS
ASBUS7
ASBUS6
ASBUS5
ASBUS4
ASBUS3
ASBUS2
ASBUS1
ASBUS0
BDBUS7
BDBUS6
BDBUS5
BDBUS4
BDBUS3
BDBUS2
BDBUS1
BDBUS0
CDBUS7
CDBUS6
CDBUS5
CDBUS4
CDBUS3
CDBUS2
CDBUS1
CDBUS0
DDBUS0
DDBUS1
DDBUS2
DDBUS3
DDBUS4
DDBUS5
DDBUS6
DDBUS7
C5 0603 10uF
C6 0603 100nF
C7 0603 100nF
C8 0603 10uF
U2
FTDI BDBUS1
FTDI CDBUS1
FTDI DDBUS1
Title
Size A
Number
Revision
Date: 4/30/2014
Sheet of
File: C:\Users\..\FTDI ToolKit Ports.SchDoc
Drawn By:

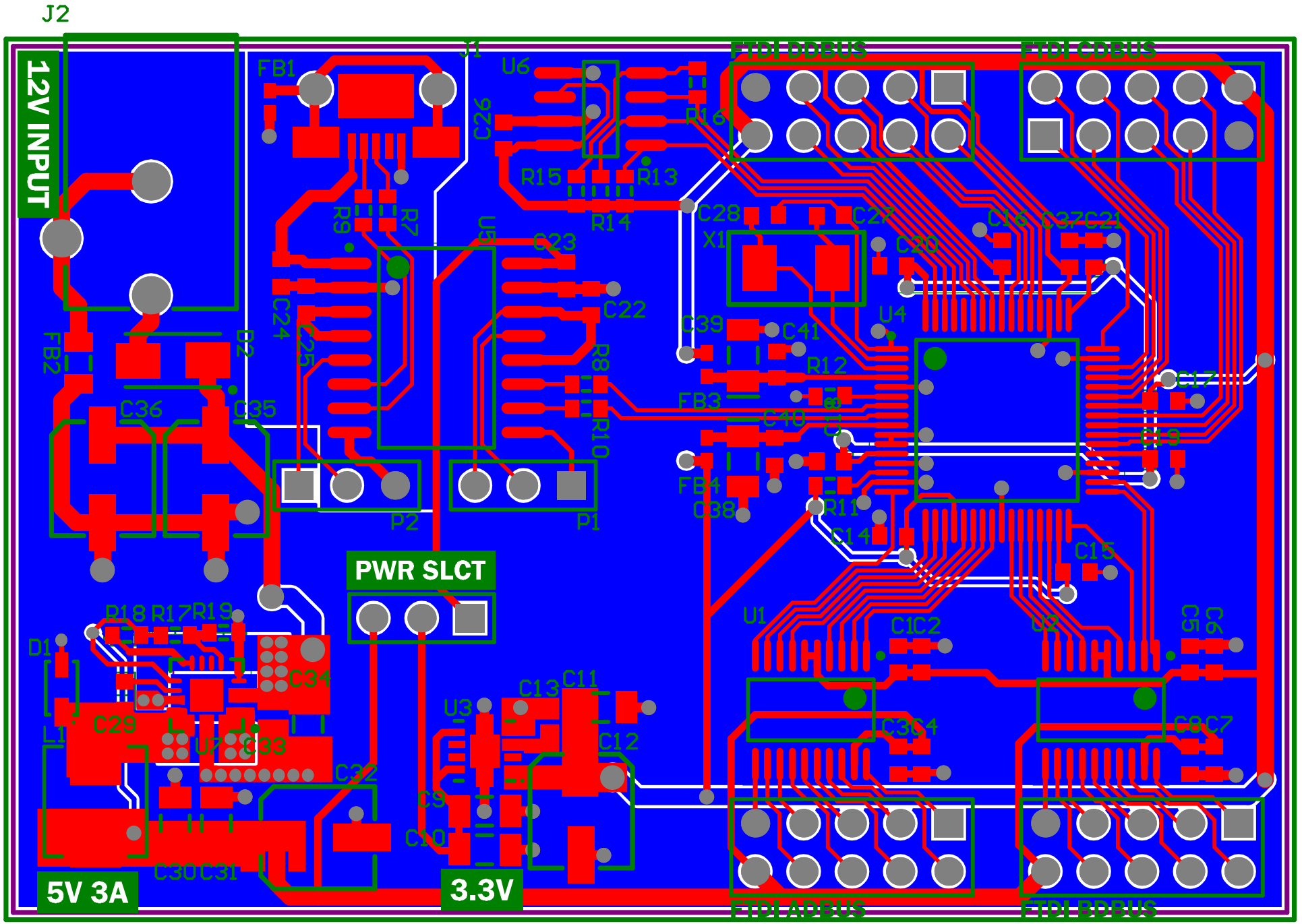
J2
12V INPUT
FB1
J1
U6
C26
R16
FTDI ADBUS
FTDI CDBUS
R15
R13
R14
C28
C27
C16
C37
C21
R9
R7
U5
C23
X1
C20
C22
C24
C25
C39
C41
U4
FB2
D2
R8
R12
C36
C35
FB3
C40
C17
R10
C19
FB4
C38
R11
P2
P1
C14
C15
PWR SLCT
R18
R17
R19
U1
C1
C2
U2
C5
C6
D1
C34
C13
C11
U3
C29
L1
U7
C33
C12
C3
C4
C8
C7
C32
C9
C10
C30
C31
5V 3A
3.3V
FTDI ADBUS
FTDI BDBUS

Comment	Description	Designator	Footprint	LibRef	Quantity
0603	Capacitor (Semiconductor SIM Model)	C1, C2, C3, C4, C5, C6, C7, C8, C13, C14, C15, C16, C17, C18, C19, C20, C21, C22, C23, C24, C25, C26, C27, C28, C33, C37, C40, C41	1608[0603]	Cap Semi	28
1206 Tantulum	Capacitor (Semiconductor SIM Model)	C9, C10, C11	C1206	Cap Semi	3
VS C	Capacitor (Semiconductor SIM Model), Capacitor (Semiconductor SIM Model), Polarized Capacitor (Surface Mount), Polarized Capacitor (Surface Mount)	C12, C32, C35, C36	Panasonic VS C	Cap Semi, Cap Semi, Cap Pol3, Cap Pol3	4
Cap Semi	Capacitor (Semiconductor SIM Model)	C29	1608[0603]	Cap Semi	1
1206	Capacitor (Semiconductor SIM Model)	C30, C34	C1206	Cap Semi	2
Cap Semi	Capacitor (Semiconductor SIM Model)	C31	C1206	Cap Semi	1
1206	Polarized Capacitor (Surface Mount)	C38, C39	C1206POL	Cap Pol3	2
PMEG1030EH_EJ	Default Diode	D1	PMEG1030EH_EJ	Diode	1
PMEG4050EP	Default Diode	D2	PMEG4050EP	Diode	1
BLM18PG121SN1D		FB1, FB3, FB4	BLM18PG121SN1D	BLM18PG121SN1D	3
MI0805L301R-10	Inductor	FB2	SM 0805 - gap trimmed	Inductor	1
Header 5X2	Header, 5-Pin, Dual row	FTDI ADBUS1, FTDI BDBUS1, FTDI CDBUS1, FTDI DDBUS1	HDR2X5	Header 5X2	4
DX4R005J91R5100	Micro USB Jack B	J1	Micro USB Circular Holes Only	Micro USB	1
Center-positive 2.1 mm power jack	Power jack	J2	PJ-102AH	PWR2.5	1
Inductor	Inductor	L1	CIP0530LR3R3	Inductor	1
Header 3	Header, 3-Pin	P1, P2, PWR SLCT	HDR1X3	Header 3	3
0603	Resistor	R7, R8, R9, R10, R11, R12, R13, R14, R15, R16	J1-0603	Res3	10
Res3	Resistor	R17, R18, R19	J1-0603	Res3	3
TXB0108	Ti TXB0108 Bidirectional Level Translator	U1, U2	TXB0108	TXB0108	2
TPS73733QDRBRQ1	Single Output Automotive LDO, 1 A, Fixed 3.3 V Output, 2.2 to 5.5 V Input, with Reverse Current Protection, 8-pin SON (DRB), -40 to 125 degC, Green (RoHS & no Sb/Br)	U3	TI-DRB8-1750X1500TP_V	TPS73733QDRBRQ1	1
FT4232HL-Reel	Quad High Speed USB To Multipurpose UART/MPSSE IC, 64-pin LQFP, Tape and Reel	U4	LQFP-64_N	FT4232HL-Reel	1
ADuM4160	USB Opto Isolator	U5	ADuM4160	ADuM4160	1
AT93C46		U6	SOIC127P600X175-8N	AT93C46	1
MIC24085		U7	MIC24085-AYML	MIC24085	1
12MHZ	Crystal Oscillator	X1	445C35A12M00000	XTAL	1