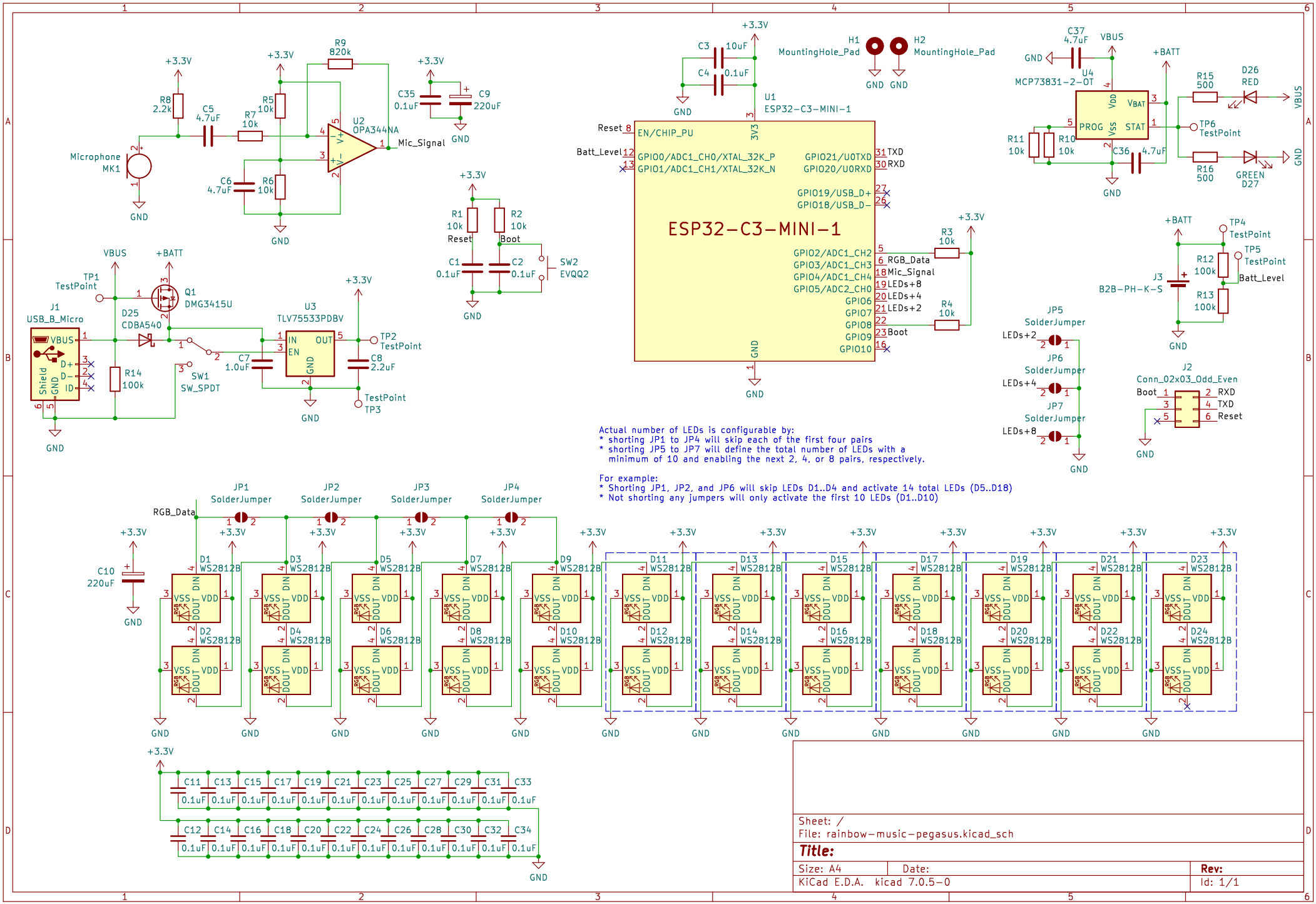
ESP32-C3-MINI-1
U1
ESP32-C3-MINI-1
EN/CHIP_PU
GPIO0/ADC1_CH0/XTAL_32K_P
GPIO1/ADC1_CH1/XTAL_32K_N
GPIO21/U0TXD
GPIO20/U0RXD
GPIO19/USB_D+
GPIO18/USB_D-
GPIO2/ADC1_CH2
GPIO3/ADC1_CH3
GPIO4/ADC1_CH4
GPIO5/ADC2_CH0
GPIO6
GPIO7
GPIO8
GPIO9
GPIO10
3V3
Reset
Batt_Level
TXD
RXD
RGB_Data
Mic_Signal
LEDs+8
LEDs+4
LEDs+2
Boot
U2
OPA344NA
Mic_Signal
Microphone
MK1
U3
TLV75533PDBV
IN
OUT
EN
GND
Q1
DMG3415U
D25
CDBA540
J1
USB_B_Micro
VBUS
D+
D-
ID
Shield
SW1
SW_SPDT
SW2
EVQQ2
TP1
TestPoint
TP2
TestPoint
TP3
TestPoint
TP4
TestPoint
TP5
TestPoint
TP6
TestPoint
Batt_Level
U4
MCP73831-2-OT
VDD
VBAT
PROG
VSS
STAT
J3
B2B-PH-K-S
J2
Conn_02x03_Odd_Even
Boot
RXD
TXD
Reset
JP1
SolderJumper
JP2
SolderJumper
JP3
SolderJumper
JP4
SolderJumper
JP5
SolderJumper
JP6
SolderJumper
JP7
SolderJumper
LEDs+2
LEDs+4
LEDs+8
D26
RED
D27
GREEN
D1 WS2812B
D2 WS2812B
D3 WS2812B
D4 WS2812B
D5 WS2812B
D6 WS2812B
D7 WS2812B
D8 WS2812B
D9 WS2812B
D10 WS2812B
D11 WS2812B
D12 WS2812B
D13 WS2812B
D14 WS2812B
D15 WS2812B
D16 WS2812B
D17 WS2812B
D18 WS2812B
D19 WS2812B
D20 WS2812B
D21 WS2812B
D22 WS2812B
D23 WS2812B
D24 WS2812B
VSS
DIN
DOUT
VDD
RGB
C10
220uF
C11 C13 C15 C17 C19 C21 C23 C25 C27 C29 C31 C33
C12 C14 C16 C18 C20 C22 C24 C26 C28 C30 C32 C34
0.1uF
Actual number of LEDs is configurable by:
* shorting JP1 to JP4 will skip each of the first four pairs
* shorting JP5 to JP7 will define the total number of LEDs with a minimum of 10 and enabling the next 2, 4, or 8 pairs, respectively.
For example:
* Shorting JP1, JP2, and JP6 will skip LEDs D1..D4 and activate 14 total LEDs (D5..D18)
* Not shorting any jumpers will only activate the first 10 LEDs (D1..D10)
Sheet: /
File: rainbow-music-pegasus.kicad_sch
Title:
Size: A4
Date:
Rev:
KiCad E.D.A. kicad 7.0.5-0
Id: 1/1