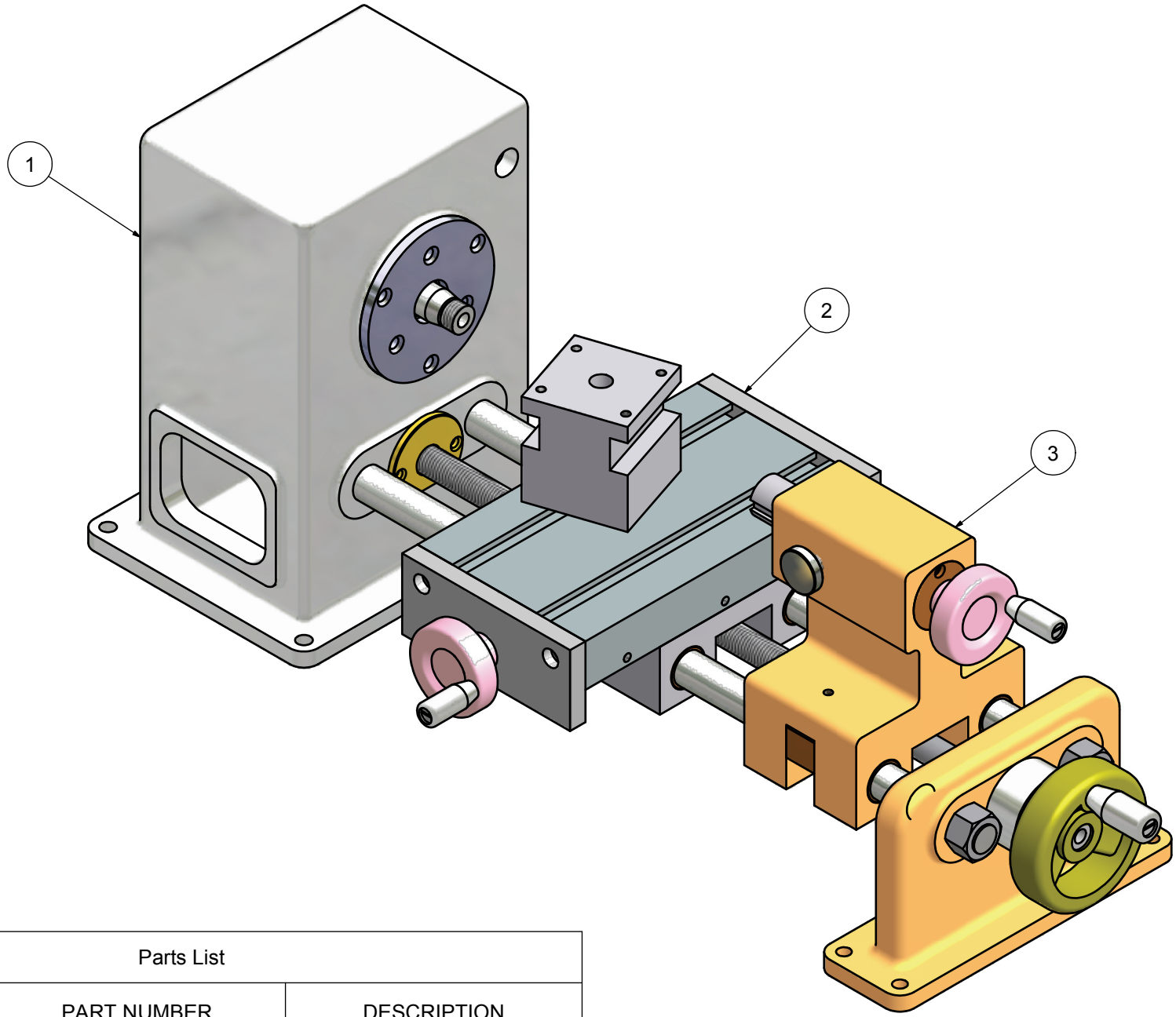

Parts List			
ITEM	QTY	PART NUMBER	DESCRIPTION
3	1	LatheTailStock	Tail Stock
2	1	LatheCarriage	Saddle
1	1	05HaeslLatheHeadStock	Head Stock and Lathe Bed

Bench Type Centre Lathe

Part Name:

Part No: 05HaeslLathe

Dwg No: 05HaeslLathe

Drn By: iccfsin

Date: 05/2003

File: 05HaeslLathe.iam

Rev No:

Rev By: iccfsin

Date:

Qty:

Material:

Scale:

DO NOT SCALE DRAWING

PROJECTION

GENERAL MACHINING TOLERANCE
.X ± 0.20
.XX ± 0.05
0 TO 250 ± 0.5
500 & ABOVE ± 2.0
TIR ± 0.20
ANGULAR ± 1/4°

THE HONG KONG POLYTECHNIC UNIVERSITY
INDUSTRIAL CENTRE

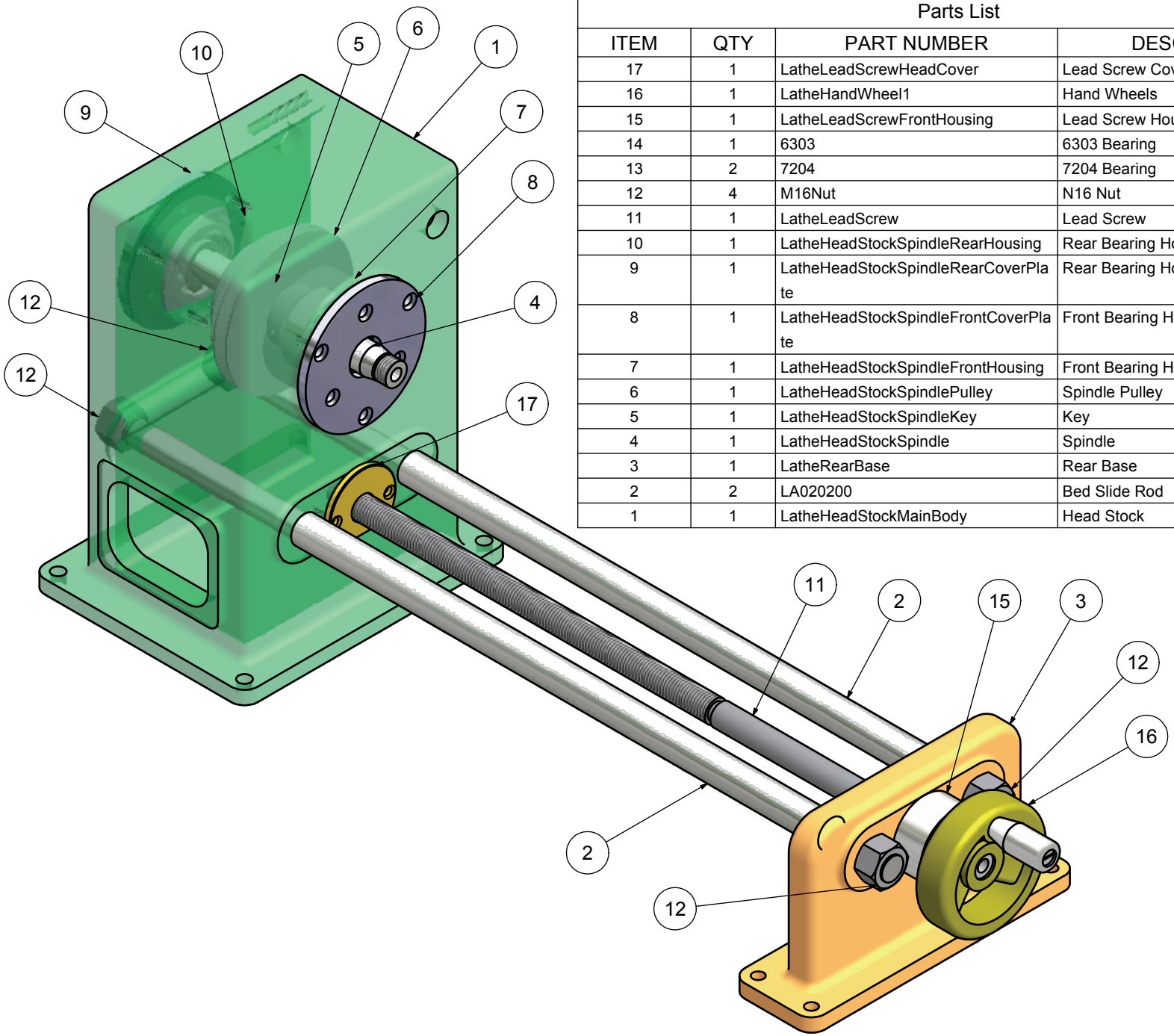

Parts List

ITEM	QTY	PART NUMBER	DESCRIPTION
17	1	LatheLeadScrewHeadCover	Lead Screw Cover
16	1	LatheHandWheel1	Hand Wheels
15	1	LatheLeadScrewFrontHousing	Lead Screw Housing
14	1	6303	6303 Bearing
13	2	7204	7204 Bearing
12	4	M16Nut	N16 Nut
11	1	LatheLeadScrew	Lead Screw
10	1	LatheHeadStockSpindleRearHousing	Rear Bearing Housing
9	1	LatheHeadStockSpindleRearCoverPlate	Rear Bearing Housing Cover
8	1	LatheHeadStockSpindleFrontCoverPlate	Front Bearing Housing Cover
7	1	LatheHeadStockSpindleFrontHousing	Front Bearing Housing
6	1	LatheHeadStockSpindlePulley	Spindle Pulley
5	1	LatheHeadStockSpindleKey	Key
4	1	LatheHeadStockSpindle	Spindle
3	1	LatheRearBase	Rear Base
2	2	LA020200	Bed Slide Rod
1	1	LatheHeadStockMainBody	Head Stock

Bench Type Centre Lathe

Part Name:

Part No: 05HaeslLatheHeadStock

Dwg No: 05HaeslLatheHeadStock

Drn By: iccfsin

Date: 05/2003

File: 05HaeslLatheHeadStock.iam

Rev No:

Rev By: iccfsin

Date:

Qty:

Material:

Scale:

DO NOT SCALE DRAWING

PROJECTION

GENERAL MACHINING TOLERANCE
.X ± 0.20
.XX ± 0.05
0 TO 250 ± 0.5
500 & ABOVE ± 2.0
TIR ± 0.20
ANGULAR ± 1/4°

THE HONG KONG POLYTECHNIC UNIVERSITY
INDUSTRIAL CENTRE

NOTES:
1. ALL FILLETS TO BE R5 UNLESS OTHERWISE SPECIFIED

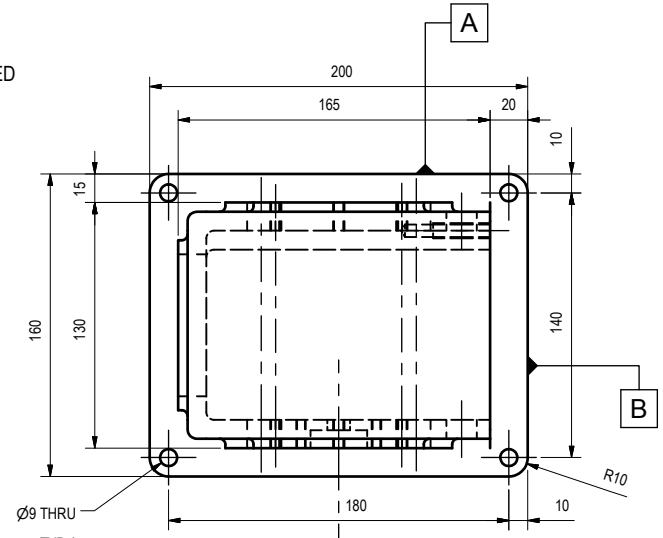

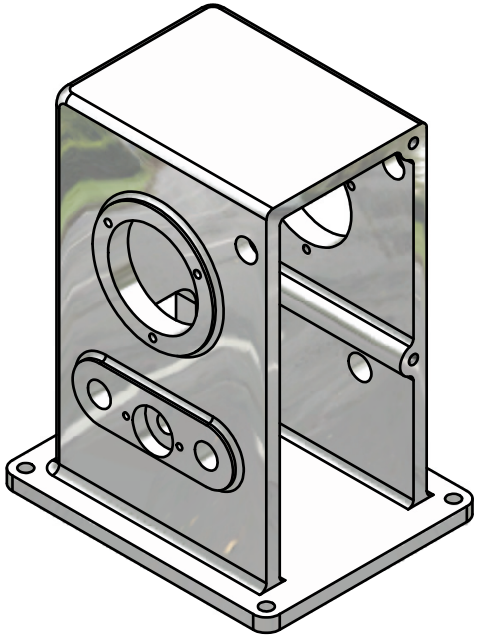

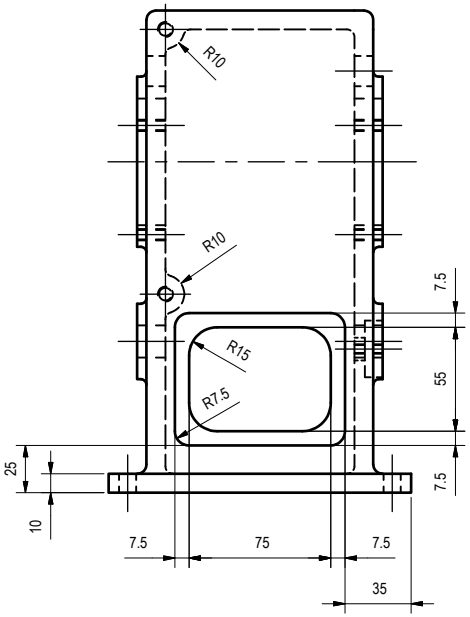

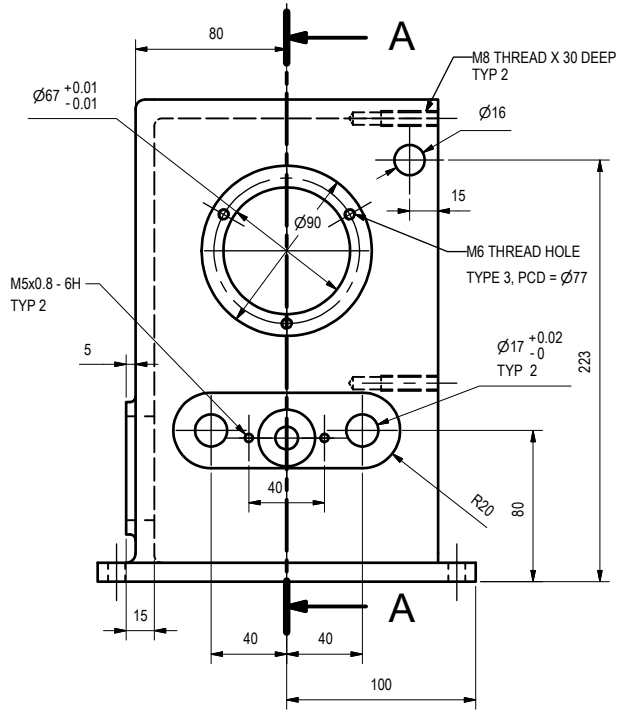

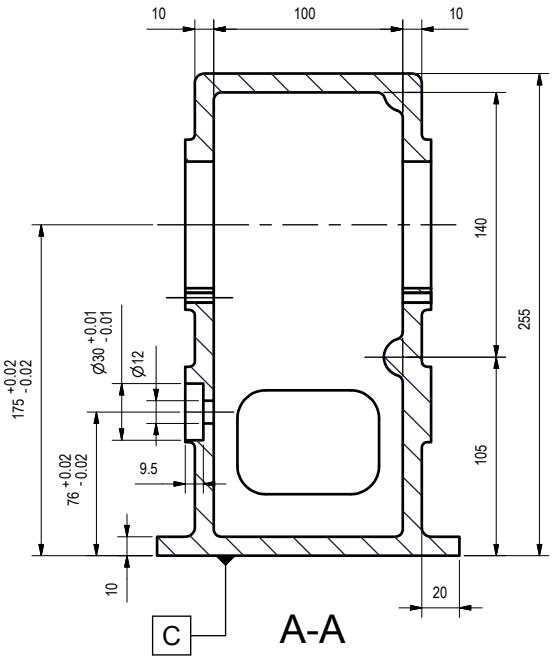

Bench Type Centre Lathe

Part Name:	Head Stock
Part No:	LatheHeadStockMainBody
Dwg No:	LatheHeadStockMainBody
Drn By:	iccfsin
Date:	05/2003
File:	LatheHeadStockMainBody.ipt
Rev No:	
Rev By:	iccfsin
Date:	
Qty:	1
Material:	ALUMINIUM
Scale:	1 : 4

DO NOT SCALE DRAWING

PROJECTION

GENERAL MACHINING TOLERANCE
.X ± 0.20
.XX ± 0.05
0 TO 250 ± 0.5
500 & ABOVE ± 2.0
TIR ± 0.20
ANGULAR ± 1/4°

THE HONG KONG POLYTECHNIC UNIVERSITY
INDUSTRIAL CENTRE

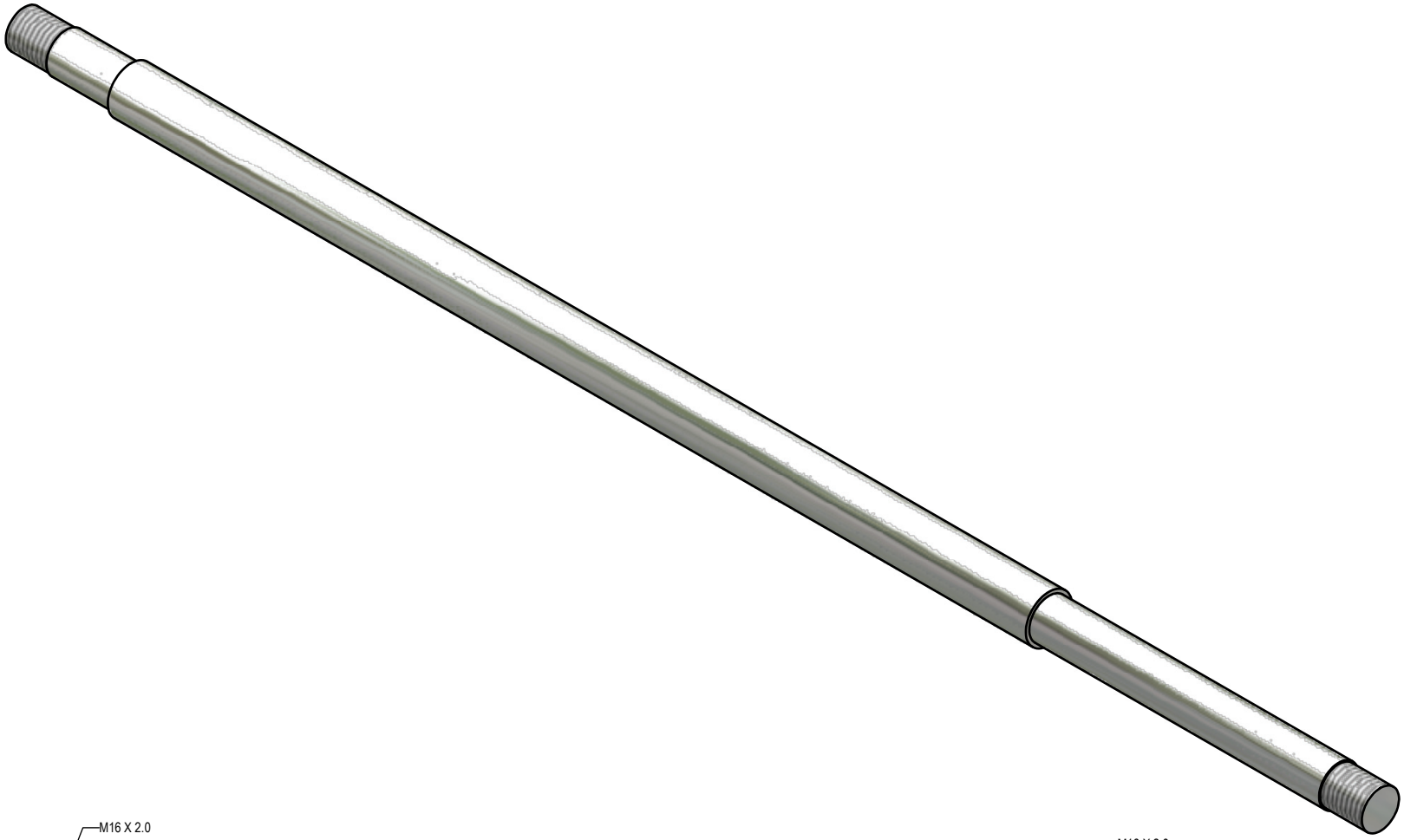

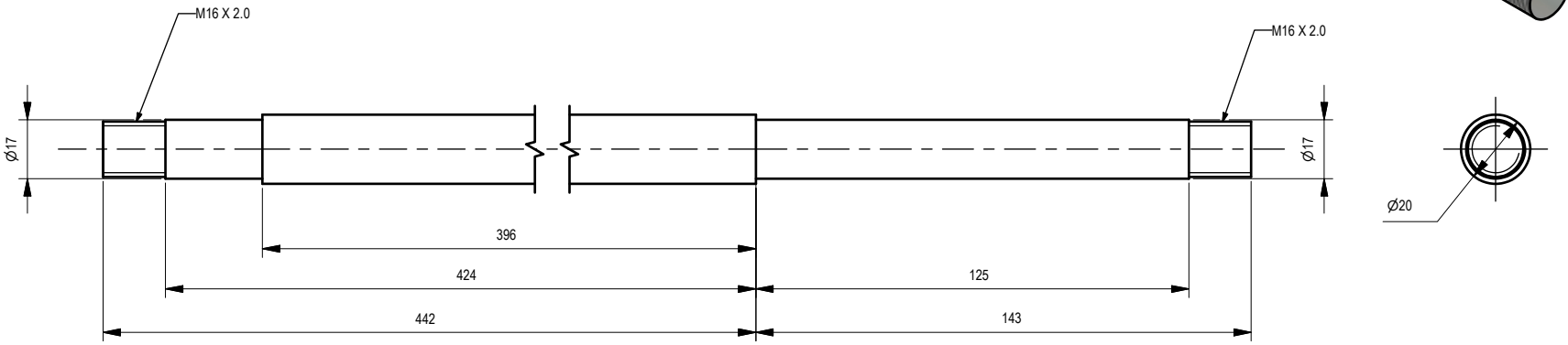

Bench Type Centre Lathe

Part Name:	Lathe Bed Slide
Part No:	LA020200
Dwg No:	LA020200
Drn By:	iccfsin
Date:	05/2003
File:	LatheBedSlide.ipt
Rev No:	
Rev By:	iccfsin
Date:	
Qty:	2
Material:	Steel
Scale:	1 : 2

DO NOT SCALE DRAWING

PROJECTION

GENERAL MACHINING TOLERANCE
.X ± 0.20
.XX ± 0.05
0 TO 250 ± 0.5
500 & ABOVE ± 2.0
TIR ± 0.20
ANGULAR ± 1/4°

THE HONG KONG POLYTECHNIC UNIVERSITY
INDUSTRIAL CENTRE

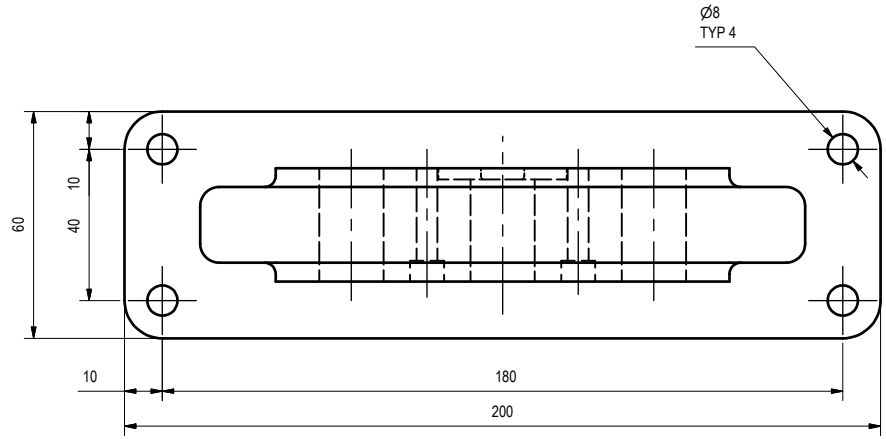

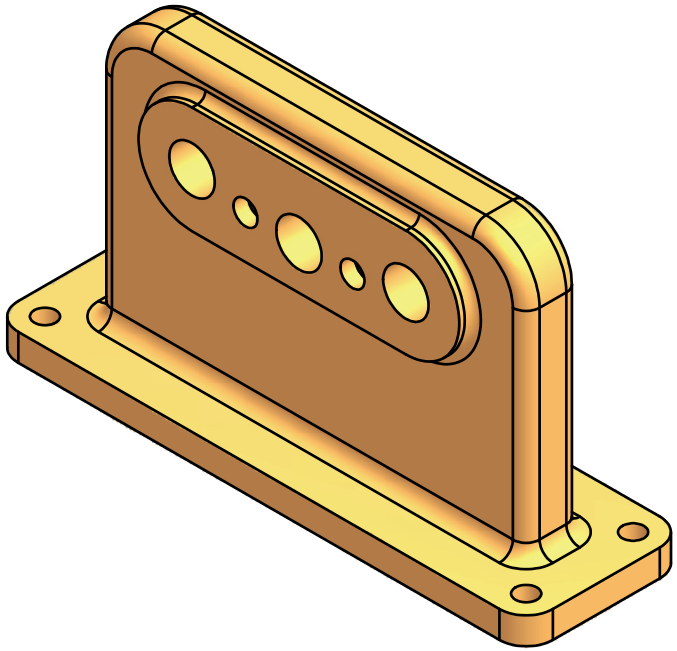

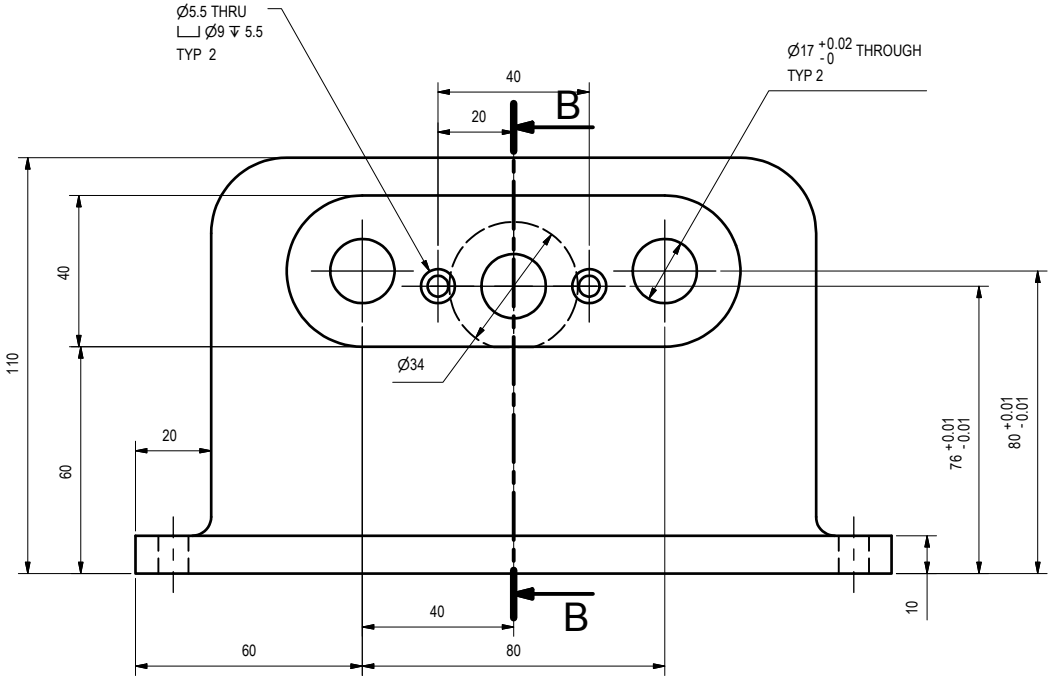

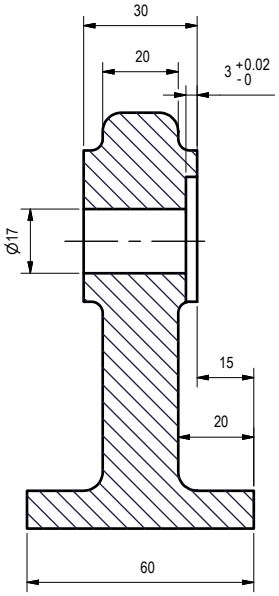

B-B

Bench Type Centre Lathe

Part Name:	Rear Base
Part No:	LatheRearBase
Dwg No:	LatheRearBase
Drn By:	iccfsin
Date:	05/2003
File:	LatheRearBase.ipt
Rev No:	
Rev By:	iccfsin
Date:	
Qty:	1
Material:	ALUMINIUM
Scale:	1 : 2

DO NOT SCALE DRAWING

PROJECTION

GENERAL MACHINING TOLERANCE
.X ± 0.20
.XX ± 0.05
0 TO 250 ± 0.5
500 & ABOVE ± 2.0
TIR ± 0.20
ANGULAR ± 1/4°

THE HONG KONG POLYTECHNIC UNIVERSITY
INDUSTRIAL CENTRE

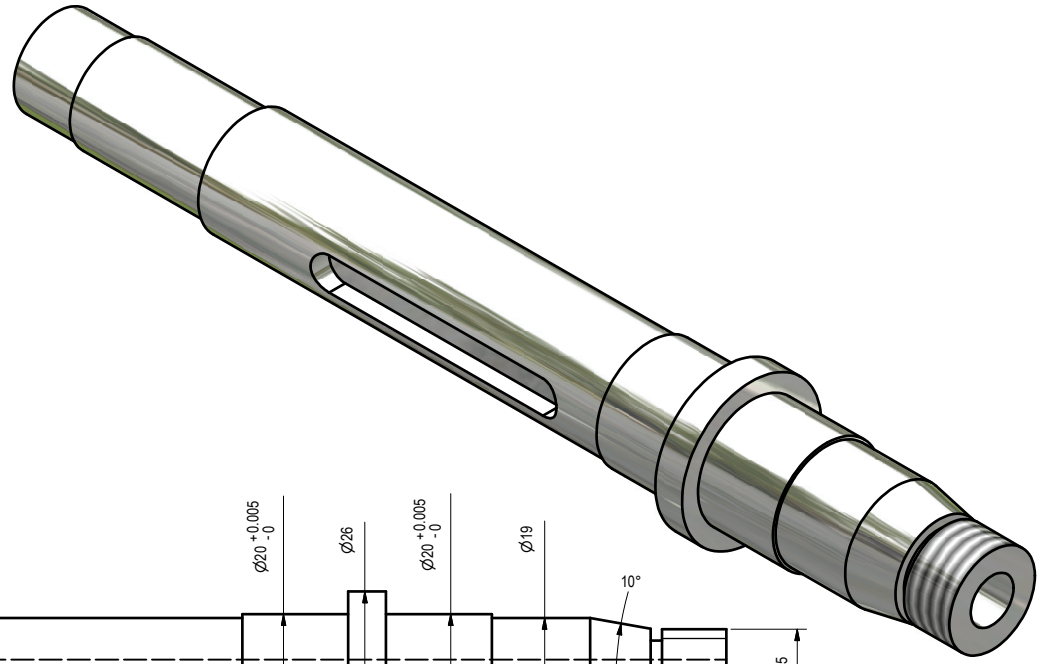

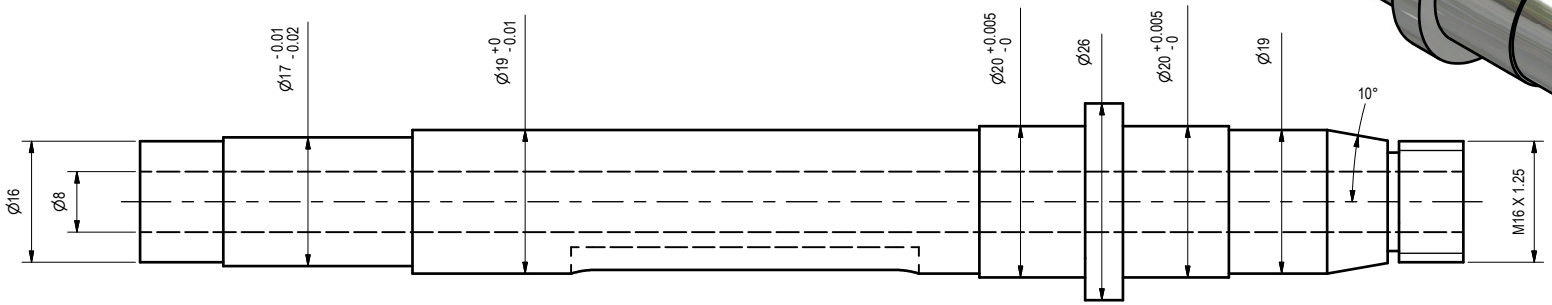

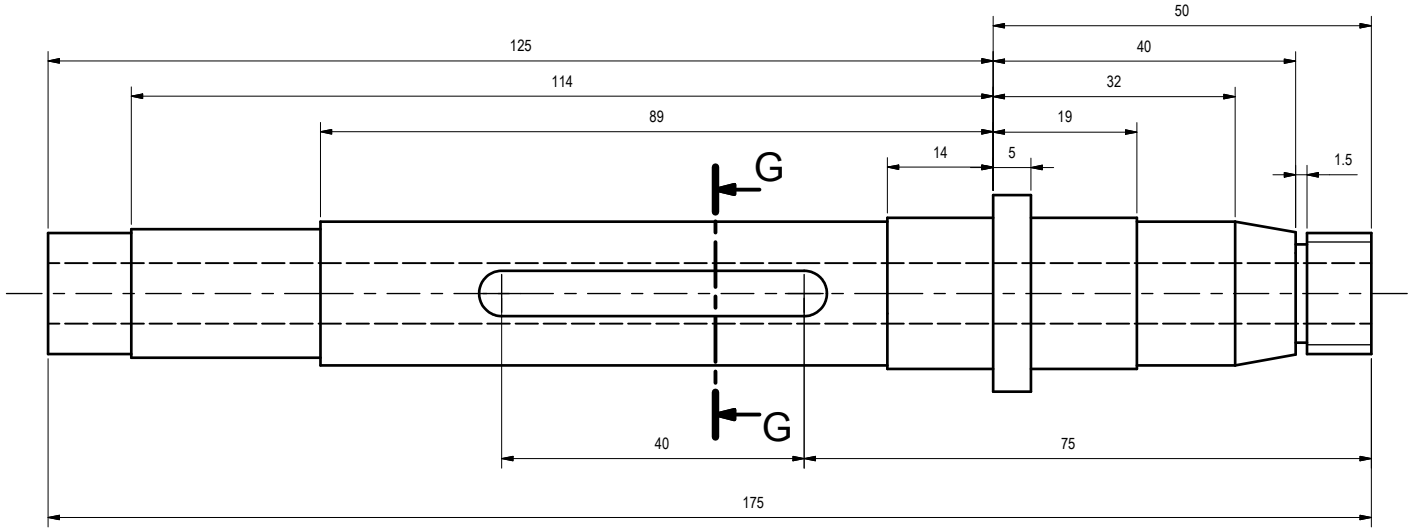

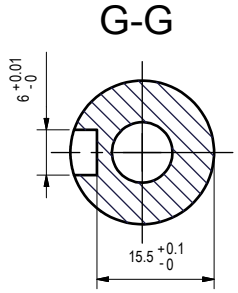

Bench Type Centre Lathe

Part Name:	Spindle
Part No:	LatheHeadStockSpindle
Dwg No:	LatheHeadStockSpindle
Drn By:	iccfsin
Date:	05/2003
File:	LatheHeadStockSpindle.ipt
Rev No:	
Rev By:	iccfsin
Date:	
Qty:	1
Material:	M CARBON STEEL
Scale:	1 : 1

DO NOT SCALE DRAWING

PROJECTION

GENERAL MACHINING TOLERANCE
.X ± 0.20
.XX ± 0.05
0 TO 250 ± 0.5
500 & ABOVE ± 2.0
TIR ± 0.20
ANGULAR ± 1/4°

THE HONG KONG POLYTECHNIC UNIVERSITY
INDUSTRIAL CENTRE

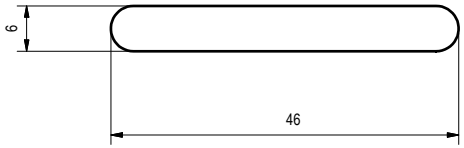

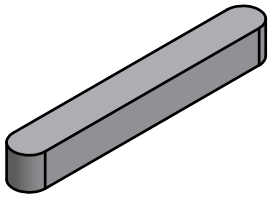

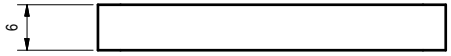

Bench Type Centre Lathe

Part Name:	Spindle Key
Part No:	LatheHeadStockSpindleKey
Dwg No:	LatheHeadStockSpindleKey
Drn By:	iccfsin
Date:	05/2003
File:	LatheHeadStockSpindleKey.ipt
Rev No:	
Rev By:	iccfsin
Date:	
Qty:	1
Material:	MILD STEEL
Scale:	1 : 1

DO NOT SCALE DRAWING

PROJECTION

GENERAL MACHINING TOLERANCE
.X ± 0.20
.XX ± 0.05
0 TO 250 ± 0.5
500 & ABOVE ± 2.0
TIR ± 0.20
ANGULAR ± 1/4°

THE HONG KONG
POLYTECHNIC UNIVERSITY
INDUSTRIAL CENTRE

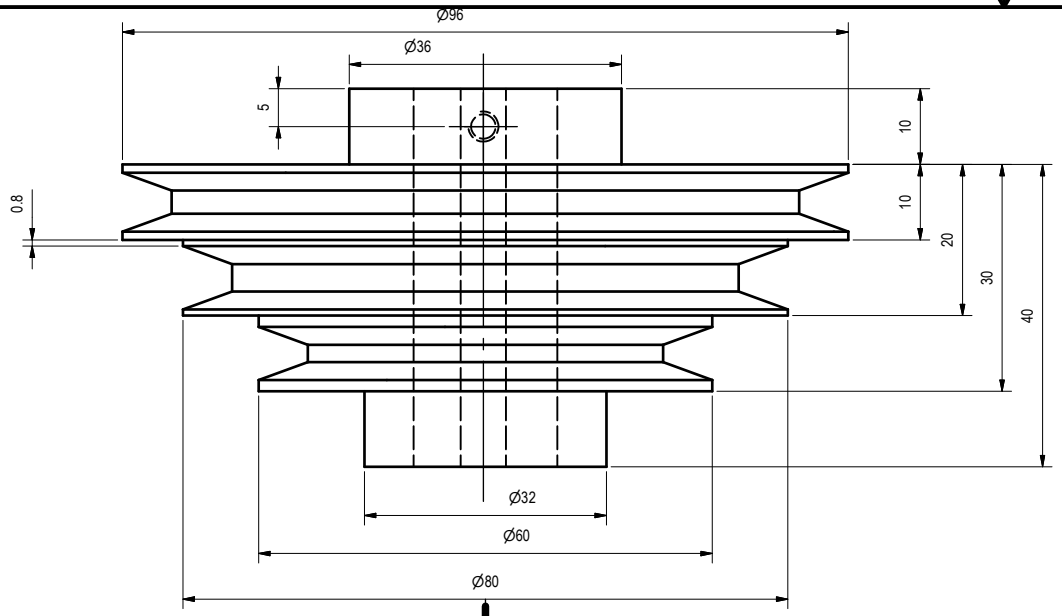

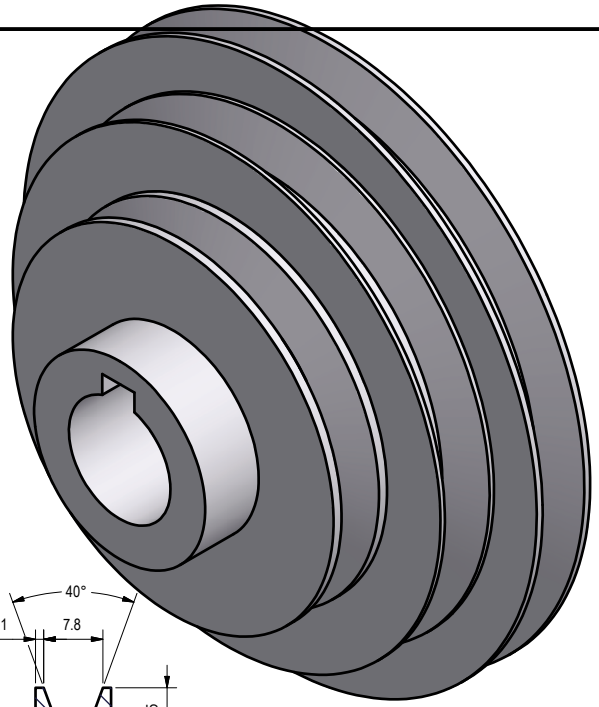

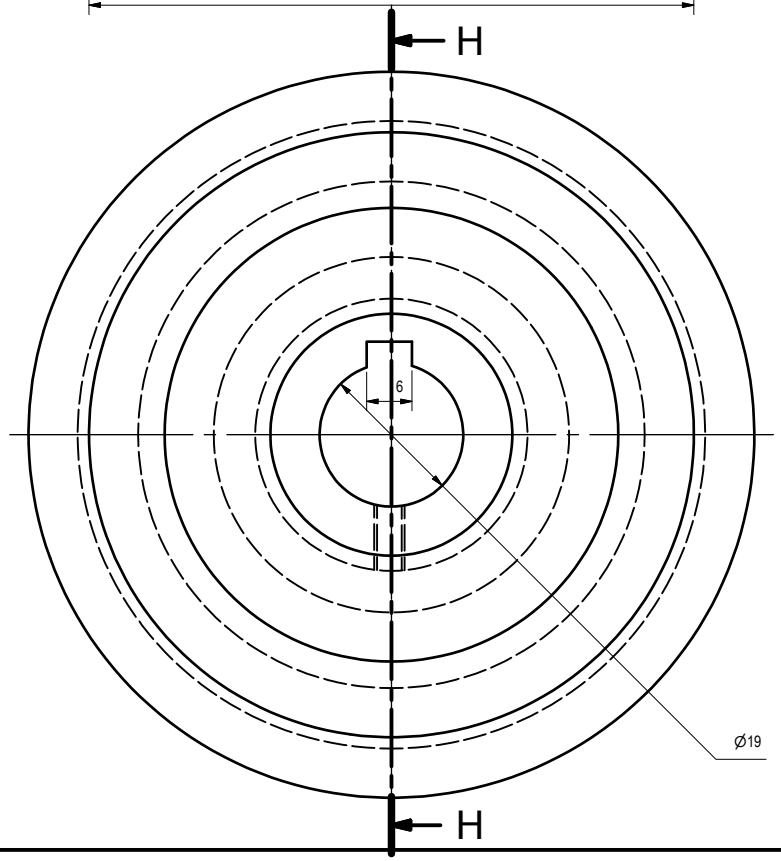

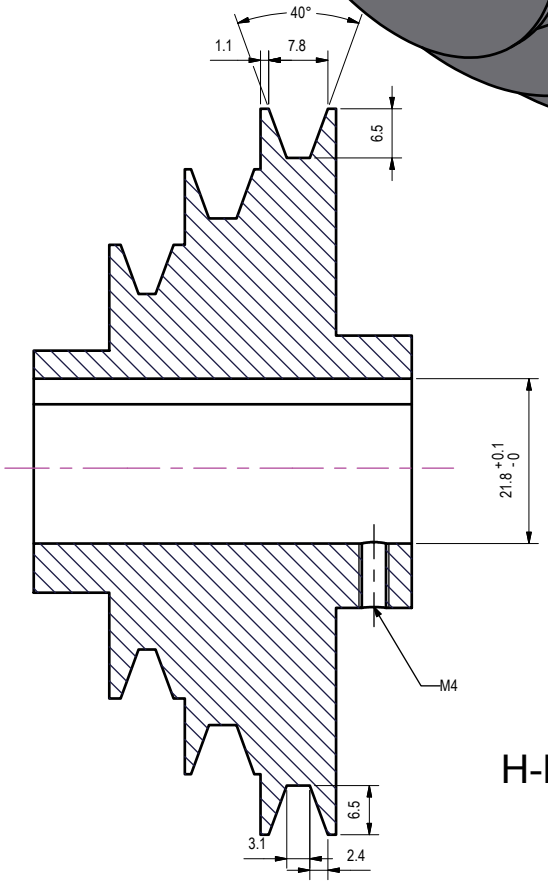

H-H

Bench Type Centre Lathe

Part Name:	Spindle Pulley
Part No:	LatheHeadStockSpindlePulley
Dwg No:	LatheHeadStockSpindlePulley
Drn By:	iccfsin
Date:	05/2003
File:	LatheHeadStockSpindlePulley.ipt
Rev No:	
Rev By:	iccfsin
Date:	
Qty:	1
Material:	ALUMINIUM
Scale:	1 : 1

DO NOT SCALE DRAWING

PROJECTION

GENERAL MACHINING TOLERANCE
.X ± 0.20
.XX ± 0.05
0 TO 250 ± 0.5
500 & ABOVE ± 2.0
TIR ± 0.20
ANGULAR ± 1/4°

THE HONG KONG POLYTECHNIC UNIVERSITY
INDUSTRIAL CENTRE

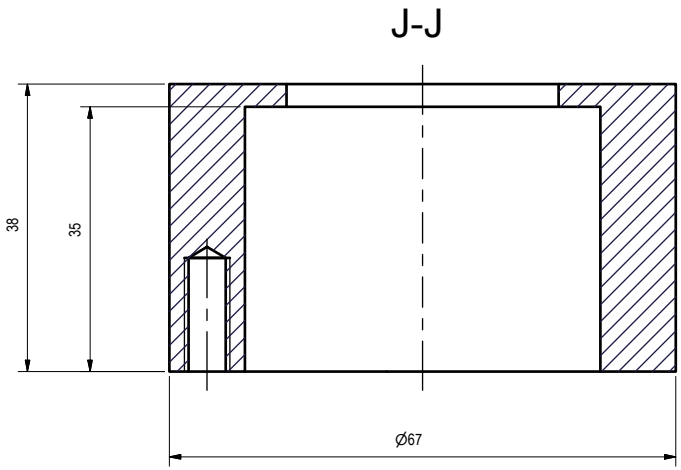

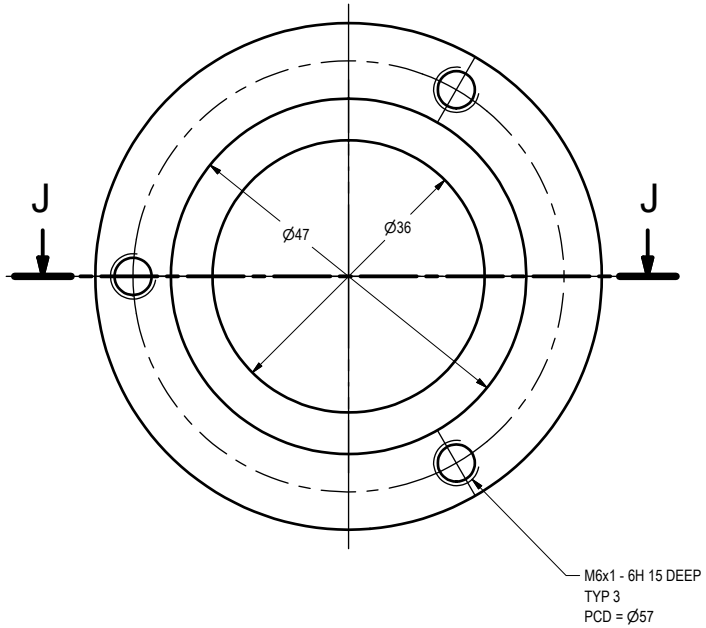

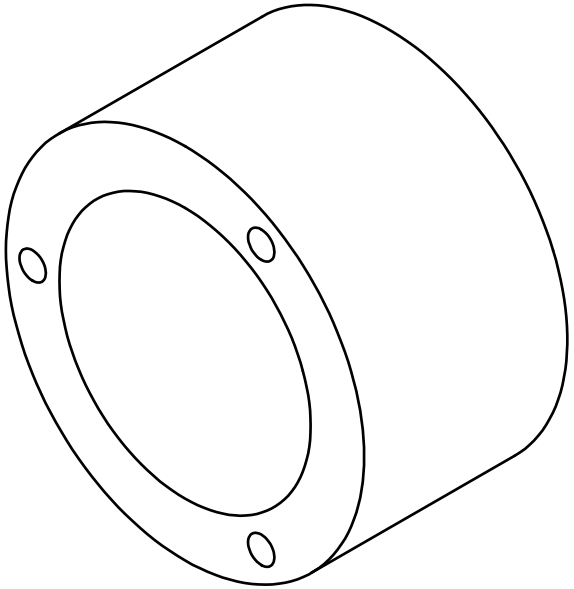

Bench Type Centre Lathe

Part Name:	Spindle Front Housing
Part No:	LatheHeadStockSpindleFrontHous
Dwg No:	LatheHeadStockSpindleFrontHous
Drn By:	iccfsin
Date:	05/2003
File:	LatheHeadStockSpindleFrontHousing.i
Rev No:	
Rev By:	iccfsin
Date:	
Qty:	1
Material:	M CARBON STEEL
Scale:	1 : 1

DO NOT SCALE DRAWING

PROJECTION

GENERAL MACHINING TOLERANCE
.X ± 0.20
.XX ± 0.05
0 TO 250 ± 0.5
500 & ABOVE ± 2.0
TIR ± 0.20
ANGULAR ± 1/4°

THE HONG KONG
POLYTECHNIC UNIVERSITY
INDUSTRIAL CENTRE

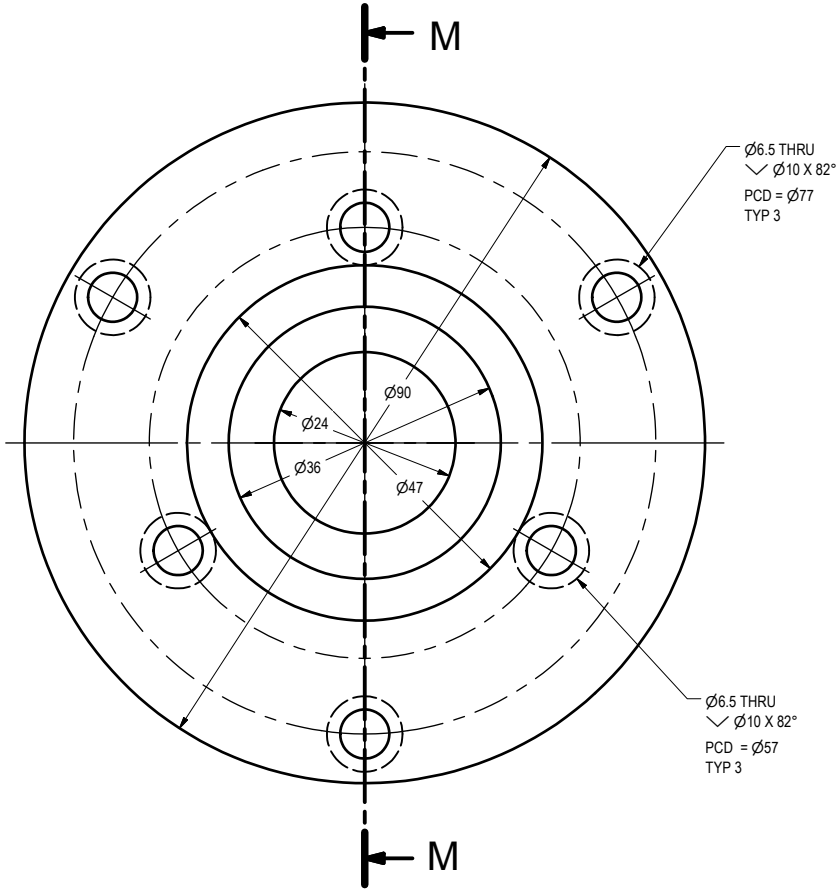

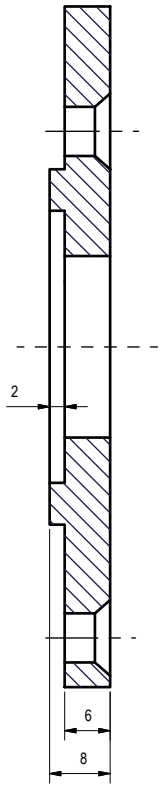

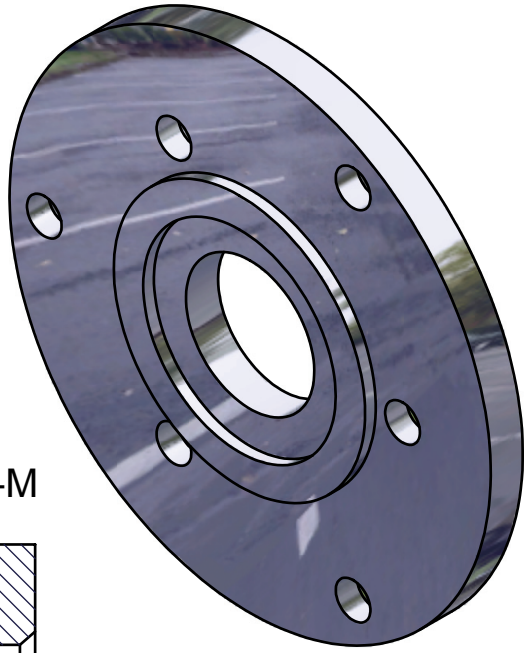

Bench Type Centre Lathe

Part Name:	Spindle Front Cover Plate
Part No:	LatheHeadStockSpindleFrontCove
Dwg No:	LatheHeadStockSpindleFrontCove
Drn By:	iccfsin
Date:	05/2003
File:	LatheHeadStockSpindleFrontCoverPlat
Rev No:	
Rev By:	iccfsin
Date:	
Qty:	1
Material:	M CARBON STEEL
Scale:	1 : 1

DO NOT SCALE DRAWING

PROJECTION

GENERAL MACHINING TOLERANCE
.X ± 0.20
.XX ± 0.05
0 TO 250 ± 0.5
500 & ABOVE ± 2.0
TIR ± 0.20
ANGULAR ± 1/4°

THE HONG KONG POLYTECHNIC UNIVERSITY
INDUSTRIAL CENTRE

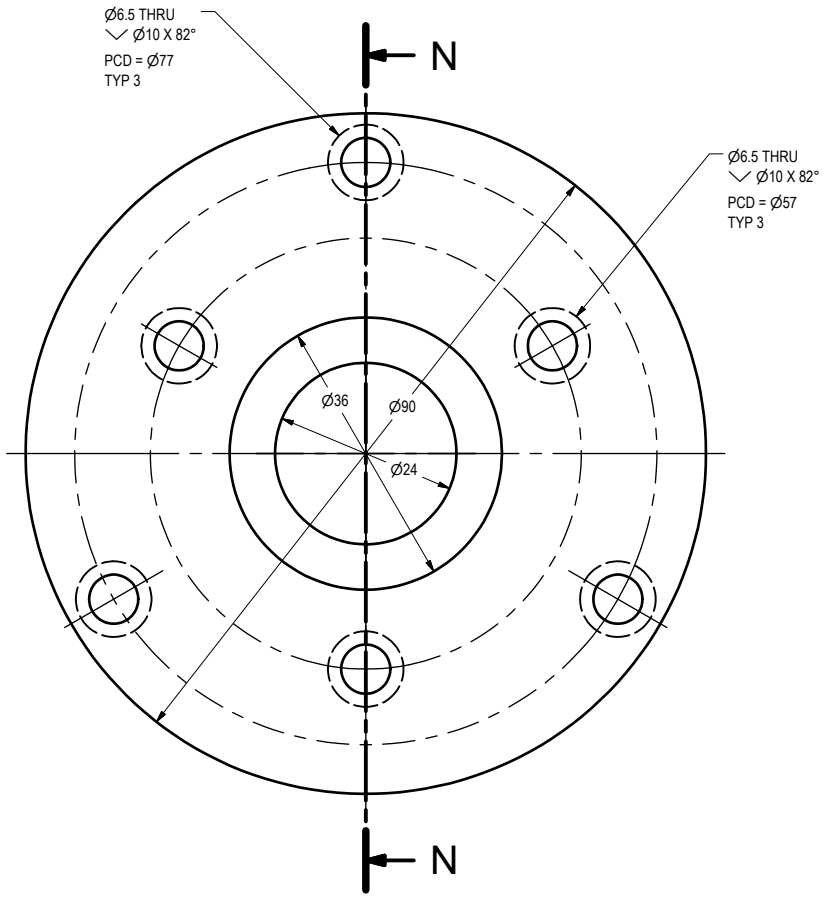

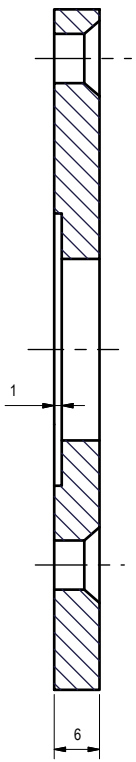

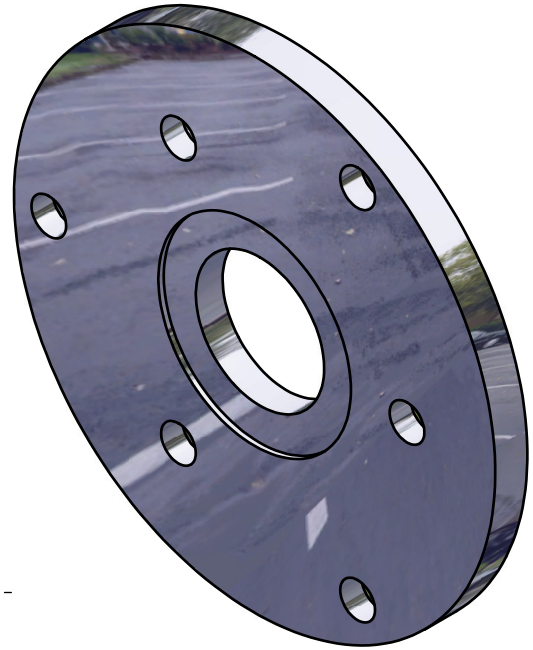

Bench Type Centre Lathe

Part Name:	Spindle Rear Cover Plate
Part No:	LatheHeadStockSpindleRearCove
Dwg No:	LatheHeadStockSpindleRearCove
Drn By:	iccfsin
Date:	05/2003
File:	LatheHeadStockSpindleRearCoverPlat
Rev No:	
Rev By:	iccfsin
Date:	
Qty:	1
Material:	M CARBON STEEL
Scale:	1 : 1

DO NOT SCALE DRAWING

PROJECTION

GENERAL MACHINING TOLERANCE
.X ± 0.20
.XX ± 0.05
0 TO 250 ± 0.5
500 & ABOVE ± 2.0
TIR ± 0.20
ANGULAR ± 1/4°

THE HONG KONG POLYTECHNIC UNIVERSITY
INDUSTRIAL CENTRE

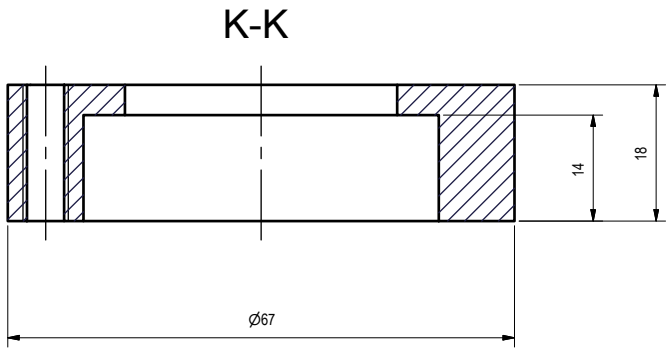

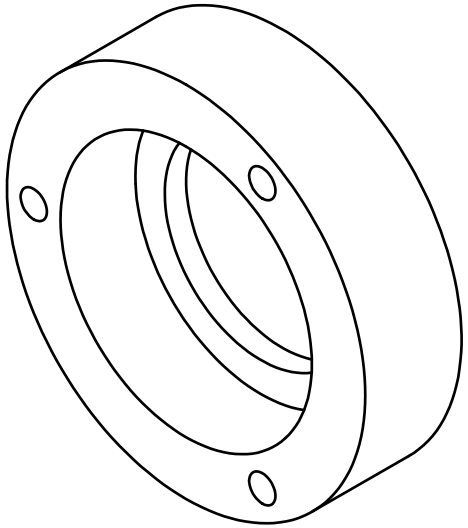

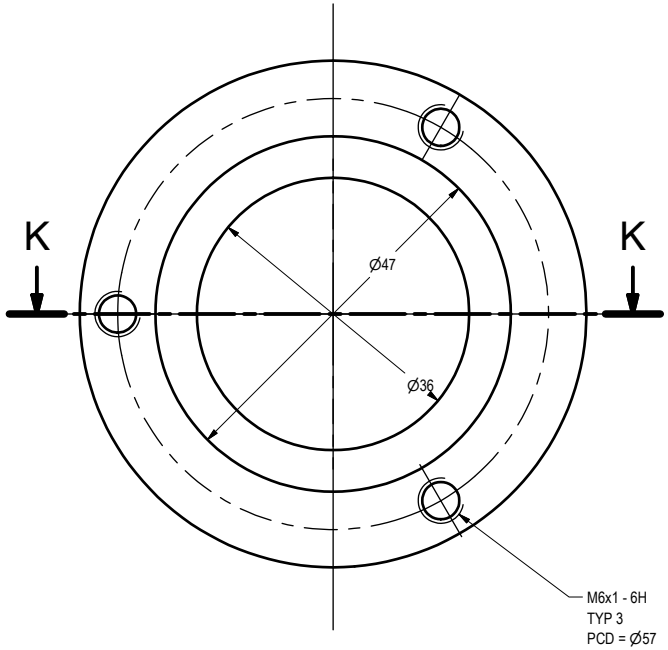

Bench Type Centre Lathe

Part Name:	Spindle Rear Houring
Part No:	LatheHeadStockSpindleRearHous
Dwg No:	LatheHeadStockSpindleRearHous
Drn By:	iccfsin
Date:	05/2003
File:	LatheHeadStockSpindleRearHousing.ip
Rev No:	
Rev By:	iccfsin
Date:	
Qty:	1
Material:	M CARBON STEEL
Scale:	1 : 1

DO NOT SCALE DRAWING

PROJECTION

GENERAL MACHINING TOLERANCE
.X ± 0.20
.XX ± 0.05
0 TO 250 ± 0.5
500 & ABOVE ± 2.0
TIR ± 0.20
ANGULAR ± 1/4°

THE HONG KONG
POLYTECHNIC UNIVERSITY
INDUSTRIAL CENTRE

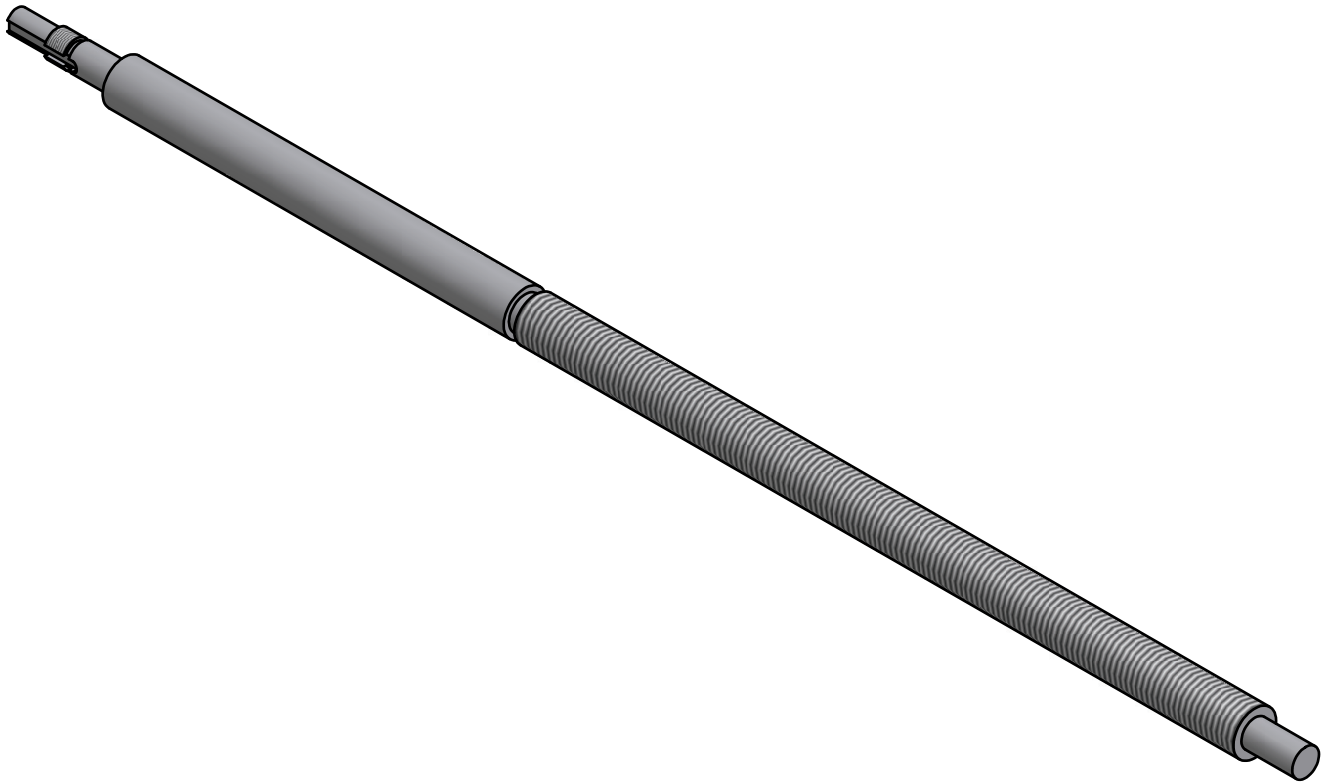

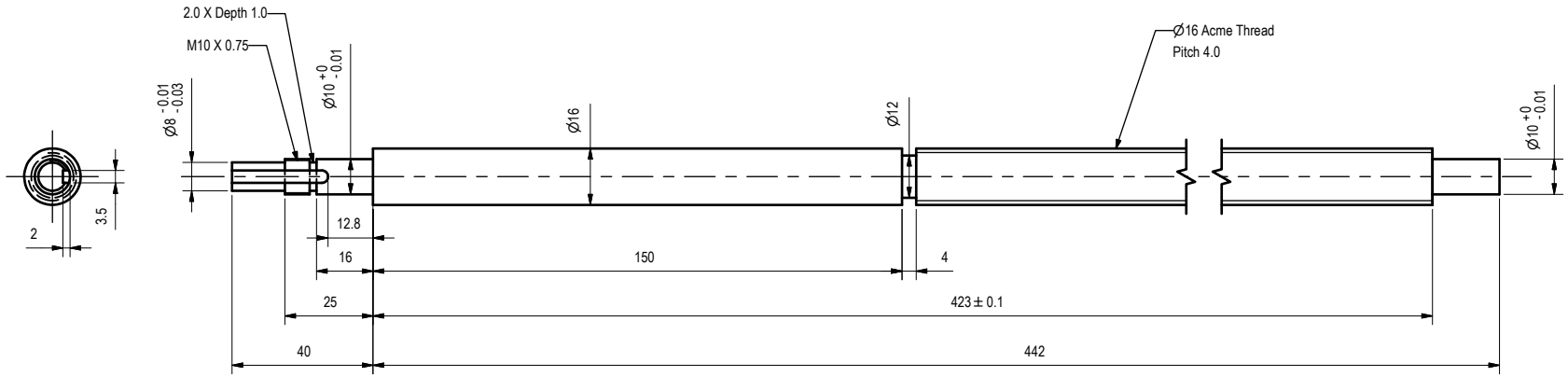

Bench Type Centre Lathe

Part Name:	Lead Screw
Part No:	LatheLeadScrew
Dwg No:	LatheLeadScrew
Drn By:	iccfsin
Date:	05/2003
File:	LatheLeadScrew.ipt
Rev No:	
Rev By:	iccfsin
Date:	
Qty:	1
Material:	Mild Steel
Scale:	1 : 2

DO NOT SCALE DRAWING

PROJECTION

GENERAL MACHINING TOLERANCE
.X ± 0.20
.XX ± 0.05
0 TO 250 ± 0.5
500 & ABOVE ± 2.0
TIR ± 0.20
ANGULAR ± 1/4°

THE HONG KONG POLYTECHNIC UNIVERSITY
INDUSTRIAL CENTRE

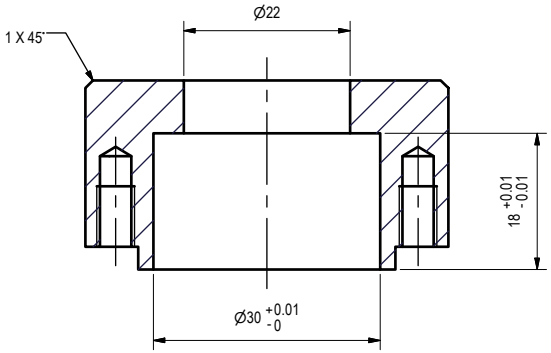

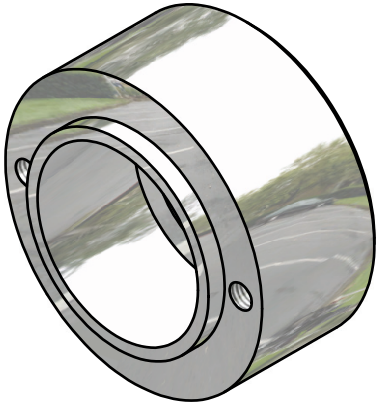

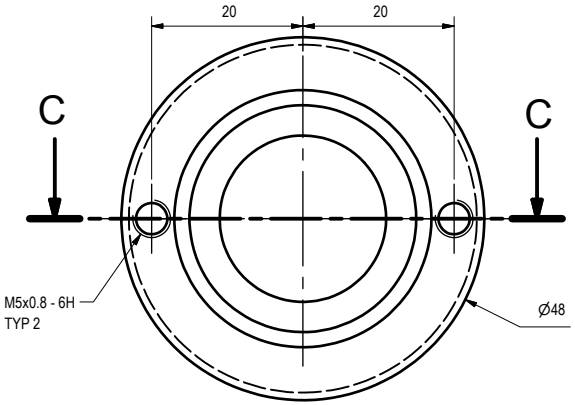

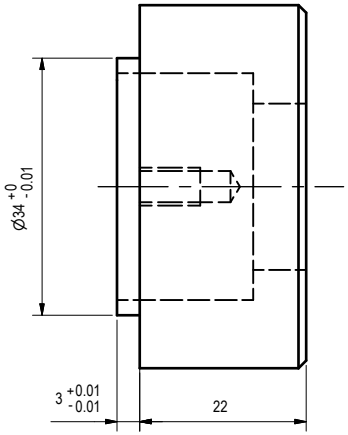

Bench Type Centre Lathe

Part Name:	Lead Screw Front Housing
Part No:	LatheLeadScrewFrontHousing
Dwg No:	LatheLeadScrewFrontHousing
Drn By:	iccfsin
Date:	05/2003
File:	LatheLeadScrewFrontHousing.ipt
Rev No:	
Rev By:	iccfsin
Date:	
Qty:	1
Material:	ALUMINIUM
Scale:	1 : 1

DO NOT SCALE DRAWING

PROJECTION

GENERAL MACHINING TOLERANCE
.X ± 0.20
.XX ± 0.05
0 TO 250 ± 0.5
500 & ABOVE ± 2.0
TIR ± 0.20
ANGULAR ± 1/4°

THE HONG KONG POLYTECHNIC UNIVERSITY
INDUSTRIAL CENTRE

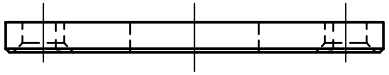

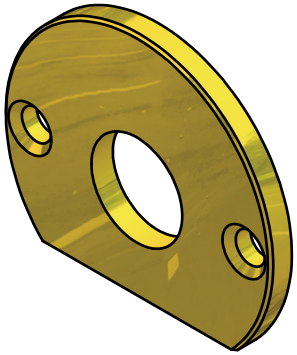

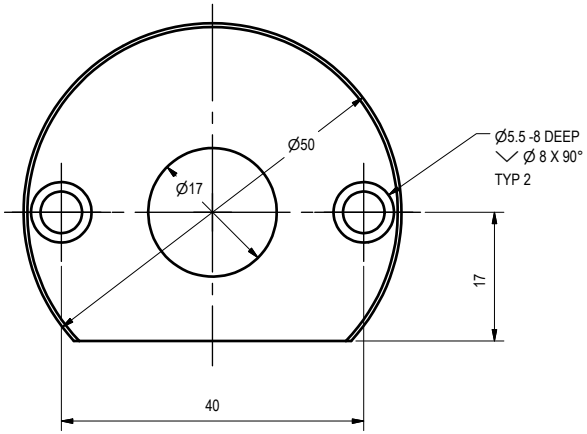

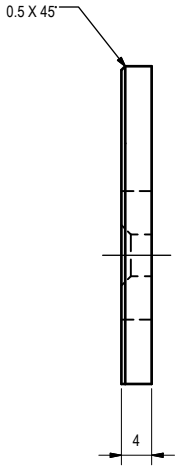

Bench Type Centre Lathe

Part Name:	LeadScrewHeadCover
Part No:	LatheLeadScrewHeadCover
Dwg No:	LatheLeadScrewHeadCover
Drn By:	iccfsin
Date:	05/2003
File:	LatheLeadScrewHeadCover.ipt
Rev No:	
Rev By:	iccfsin
Date:	
Qty:	1
Material:	BRASS
Scale:	1 : 1

DO NOT SCALE DRAWING

PROJECTION

GENERAL MACHINING TOLERANCE
.X ± 0.20
.XX ± 0.05
0 TO 250 ± 0.5
500 & ABOVE ± 2.0
TIR ± 0.20
ANGULAR ± 1/4°

THE HONG KONG POLYTECHNIC UNIVERSITY
INDUSTRIAL CENTRE

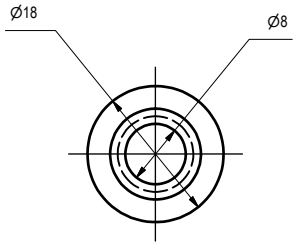

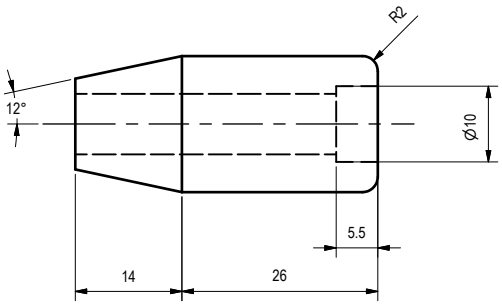

Bench Type Centre Lathe

Part Name:	Lead Screw Handle
Part No:	mm05010
Dwg No:	mm05010
Drn By:	iccfsin
Date:	05/2003
File:	LatheLeadScrewHandle.ipt
Rev No:	
Rev By:	iccfsin
Date:	
Qty:	1
Material:	ALUMINIUM
Scale:	1 : 1

DO NOT SCALE DRAWING

PROJECTION

GENERAL MACHINING TOLERANCE
.X ± 0.20
.XX ± 0.05
0 TO 250 ± 0.5
500 & ABOVE ± 2.0
TIR ± 0.20
ANGULAR ± 1/4°

THE HONG KONG POLYTECHNIC UNIVERSITY
INDUSTRIAL CENTRE

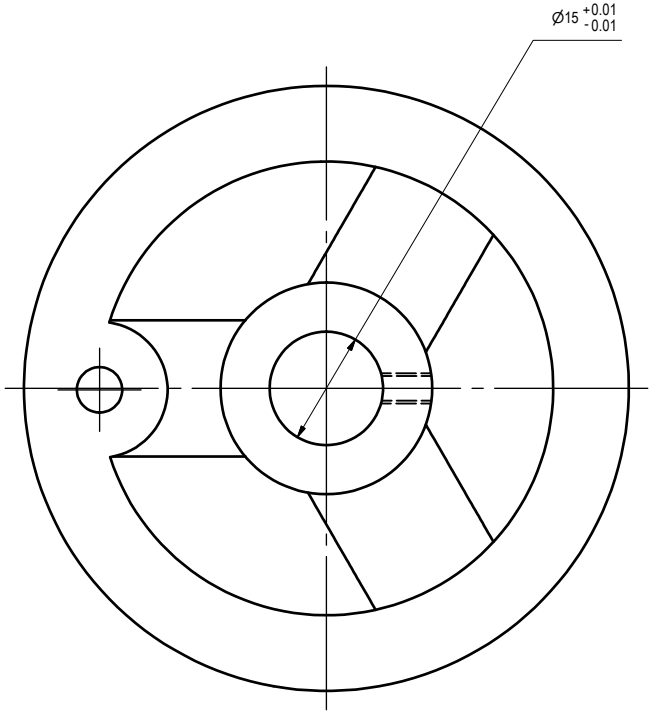

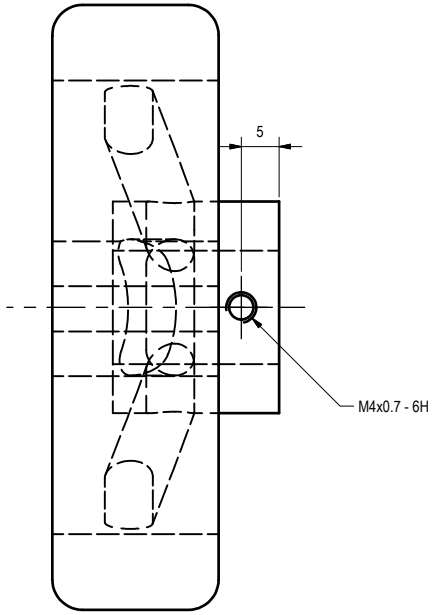

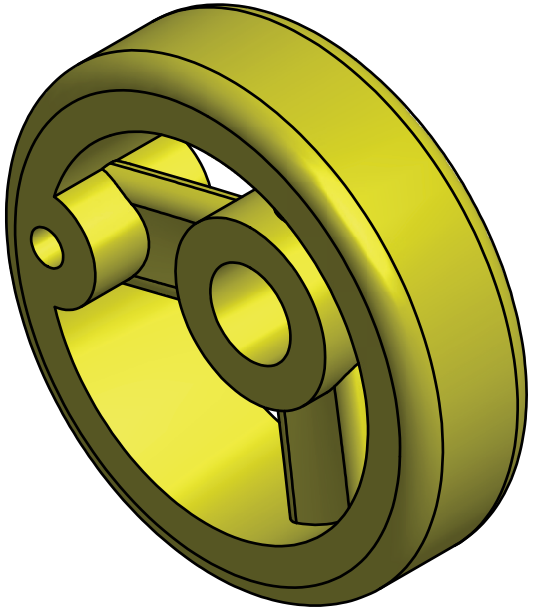

Bench Type Centre Lathe

Part Name:	Lead Screw Hand Wheel
Part No:	mm05008
Dwg No:	mm05008
Drn By:	iccfsin
Date:	05/2003
File:	LatheLeadScrewHandWheel.ipt
Rev No:	
Rev By:	iccfsin
Date:	
Qty:	1
Material:	Plastic
Scale:	1 : 1

DO NOT SCALE DRAWING

PROJECTION

GENERAL MACHINING TOLERANCE
.X ± 0.20
.XX ± 0.05
0 TO 250 ± 0.5
500 & ABOVE ± 2.0
TIR ± 0.20
ANGULAR ± 1/4°

THE HONG KONG POLYTECHNIC UNIVERSITY
INDUSTRIAL CENTRE

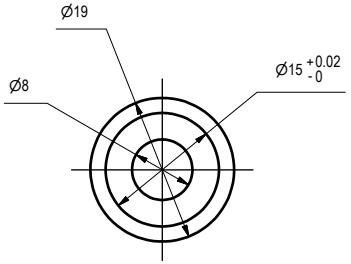

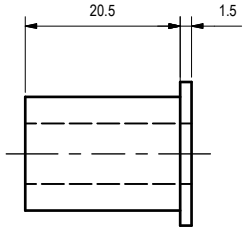

Bench Type Centre Lathe

Part Name:	Lead Screw Handle Bush
Part No:	mm05007
Dwg No:	mm05007
Drn By:	iccfsin
Date:	05/2003
File:	LatheLeadScrewHandleBush.prt
Rev No:	
Rev By:	iccfsin
Date:	
Qty:	1
Material:	BRASS
Scale:	1 : 1

DO NOT SCALE DRAWING

PROJECTION

GENERAL MACHINING TOLERANCE
.X ± 0.20
.XX ± 0.05
0 TO 250 ± 0.5
500 & ABOVE ± 2.0
TIR ± 0.20
ANGULAR ± 1/4°

THE HONG KONG POLYTECHNIC UNIVERSITY
INDUSTRIAL CENTRE

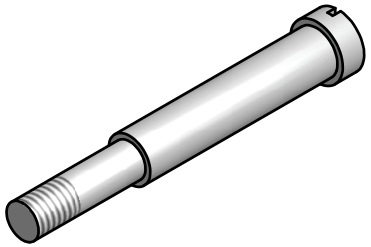

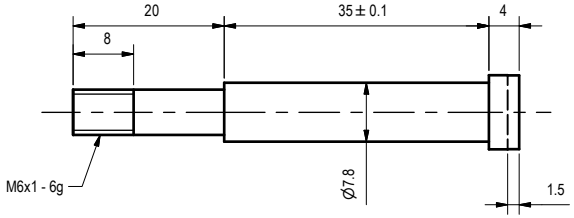

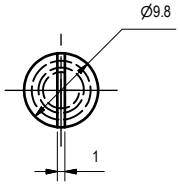

Bench Type Centre Lathe

Part Name:	Lead Screw Handle Pin
Part No:	mm05009
Dwg No:	mm05009
Drn By:	iccfsin
Date:	05/2003
File:	LatheLeadScrewHandlePin.ipt
Rev No:	
Rev By:	iccfsin
Date:	
Qty:	1
Material:	MILD STEEL
Scale:	1 : 1

DO NOT SCALE DRAWING

PROJECTION

GENERAL MACHINING TOLERANCE
.X ± 0.20
.XX ± 0.05
0 TO 250 ± 0.5
500 & ABOVE ± 2.0
TIR ± 0.20
ANGULAR ± 1/4°

THE HONG KONG POLYTECHNIC UNIVERSITY
INDUSTRIAL CENTRE

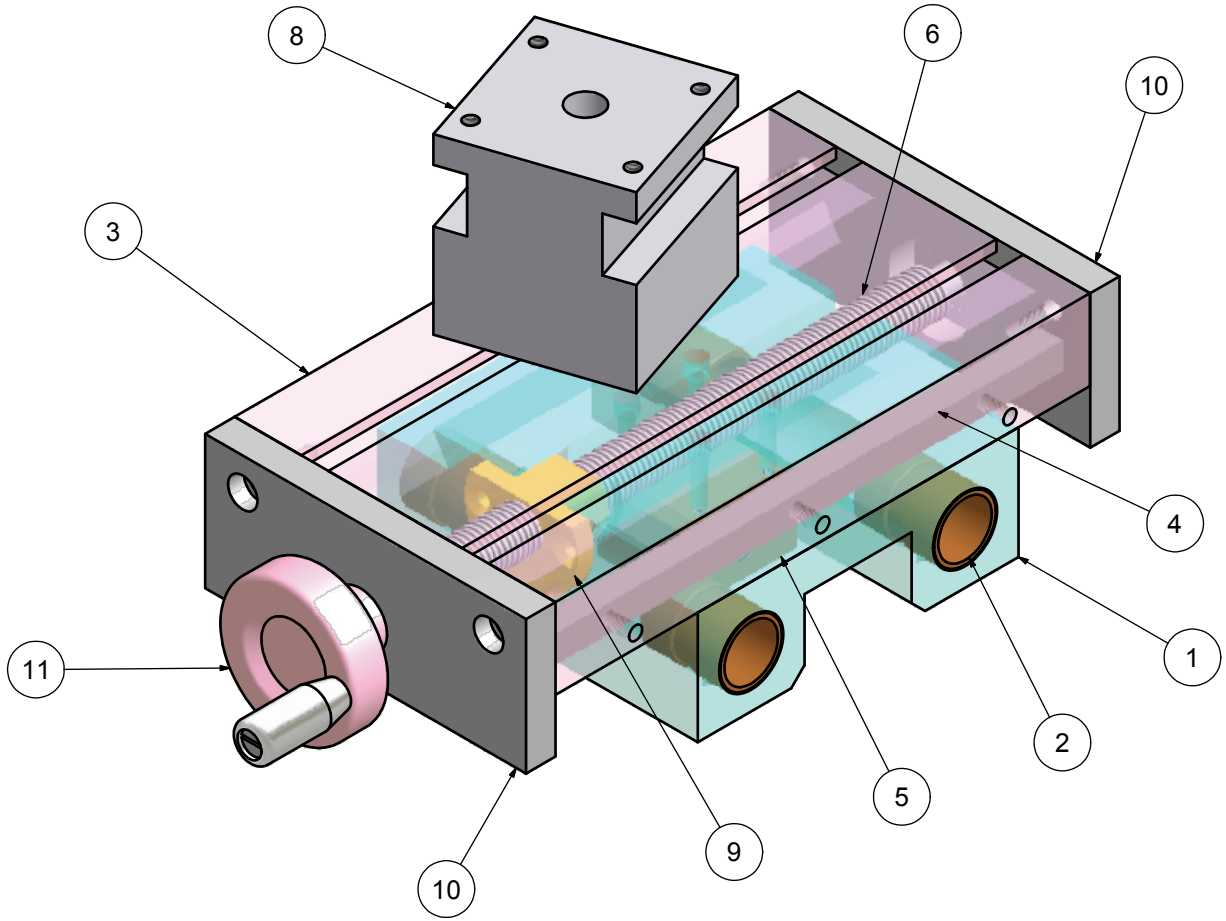

Parts List			
ITEM	QTY	PART NUMBER	DESCRIPTION
11	1	LatheHandWheel2	Hand Wheel 2
10	2	LatheCrossSlideBearHouse	Cross Slide Bearing Housing
9	1	LatheCrossSlideLeadScrewNut	Cross Slide Nut
8	1	LatheToolPost	Tool Post
7	1	LatheToolPostTeeNut	Tool Post T Nut
6	1	LatheCrossSlideFeedScrew	Cross Slide Screw
5	1	LatheLeadScrewNut	Lead Screw Nut
4	1	LatheCrossSlideGrip	Cross Slide Grip
3	1	LatheCrossSlide	Cross Slide
2	4	LatheTailStockShaftBush	Shaft Bush
1	1	LatheSaddle	Saddle

Bench Type Centre Lathe

Part Name:

Part No: LatheCarriage

Dwg No: LatheCarriage

Drn By: iccfsin

Date: 05/2003

File: LatheCarriage.iam

Rev No:

Rev By: iccfsin

Date:

Qty:

Material:

Scale:

DO NOT SCALE DRAWING

PROJECTION

GENERAL MACHINING TOLERANCE
.X ± 0.20
.XX ± 0.05
0 TO 250 ± 0.5
500 & ABOVE ± 2.0
TIR ± 0.20
ANGULAR ± 1/4°

THE HONG KONG POLYTECHNIC UNIVERSITY
INDUSTRIAL CENTRE

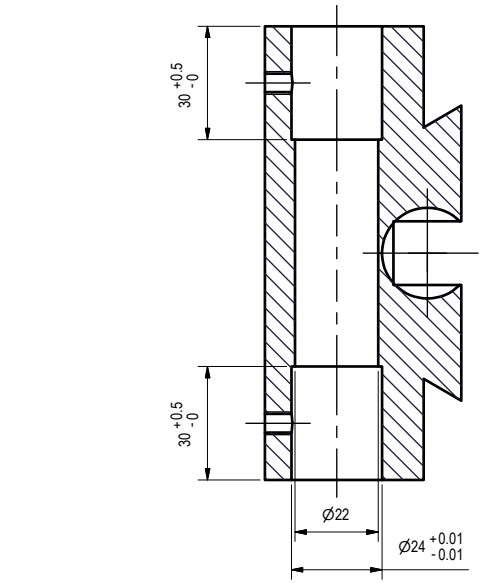

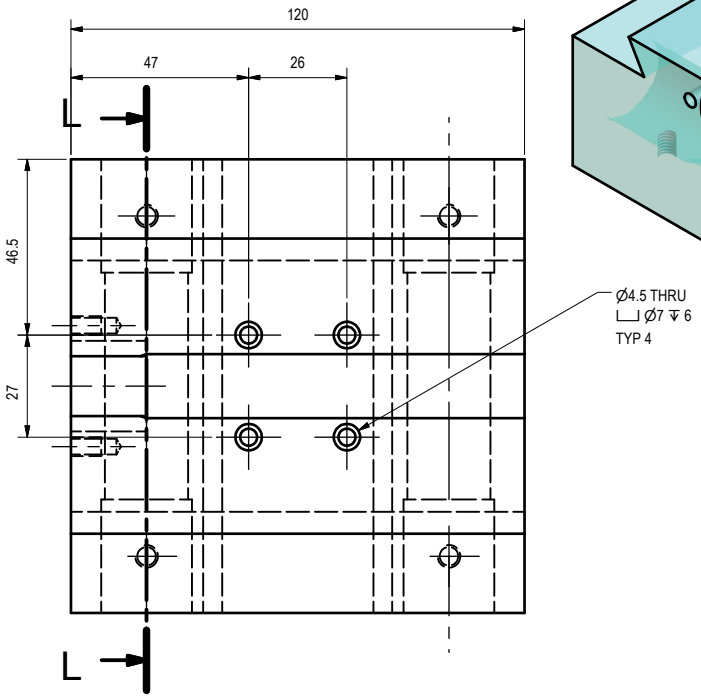

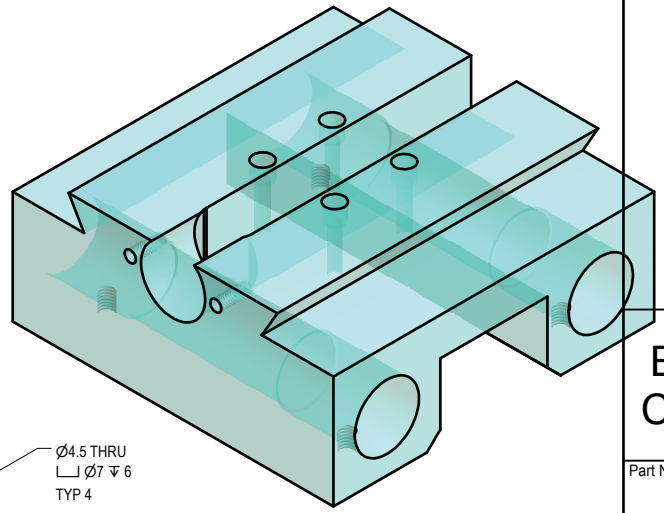

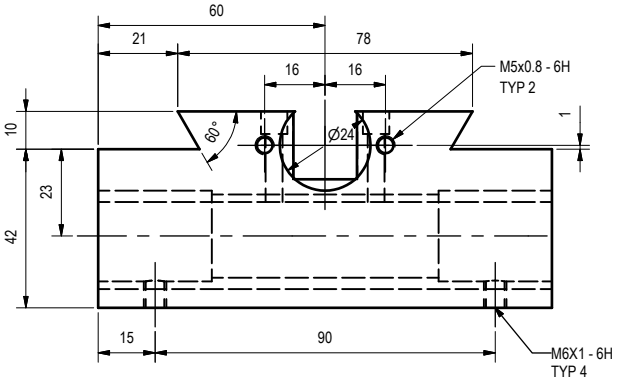

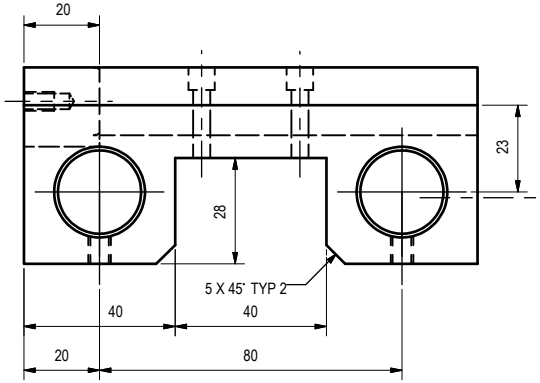

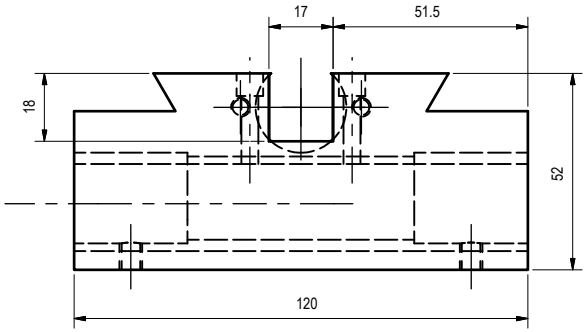

Bench Type Centre Lathe

Part Name:	Saddle
Part No:	LatheSaddle
Dwg No:	LatheSaddle
Drn By:	iccfsin
Date:	05/2003
File:	LatheSaddle.ipt
Rev No:	
Rev By:	iccfsin
Date:	
Qty:	1
Material:	CAST IRON
Scale:	1 : 2

DO NOT SCALE DRAWING

PROJECTION

GENERAL MACHINING TOLERANCE
.X ± 0.20
.XX ± 0.05
0 TO 250 ± 0.5
500 & ABOVE ± 2.0
TIR ± 0.20
ANGULAR ± 1/4°

THE HONG KONG POLYTECHNIC UNIVERSITY
INDUSTRIAL CENTRE

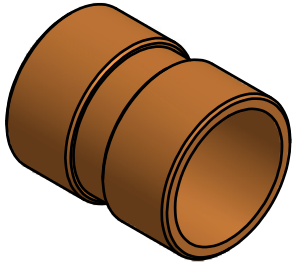

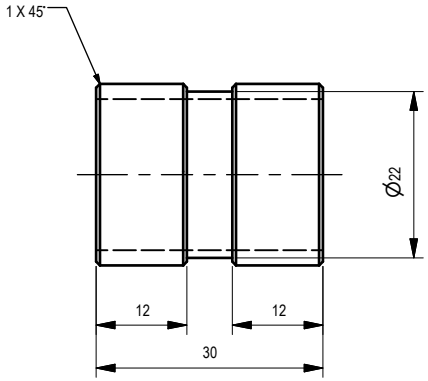

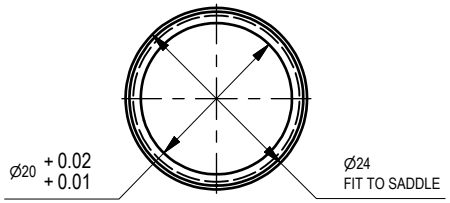

Bench Type Centre Lathe

Part Name:	Lathe Bed Slide Bush
Part No:	LatheTailStockShaftBush
Dwg No:	LatheTailStockShaftBush
Drn By:	iccfsin
Date:	05/2003
File:	LatheBedSlideBush.ipt
Rev No:	
Rev By:	iccfsin
Date:	
Qty:	4
Material:	Bronze
Scale:	1 : 1

DO NOT SCALE DRAWING

PROJECTION

GENERAL MACHINING TOLERANCE
.X ± 0.20
.XX ± 0.05
0 TO 250 ± 0.5
500 & ABOVE ± 2.0
TIR ± 0.20
ANGULAR ± 1/4°

THE HONG KONG POLYTECHNIC UNIVERSITY
INDUSTRIAL CENTRE

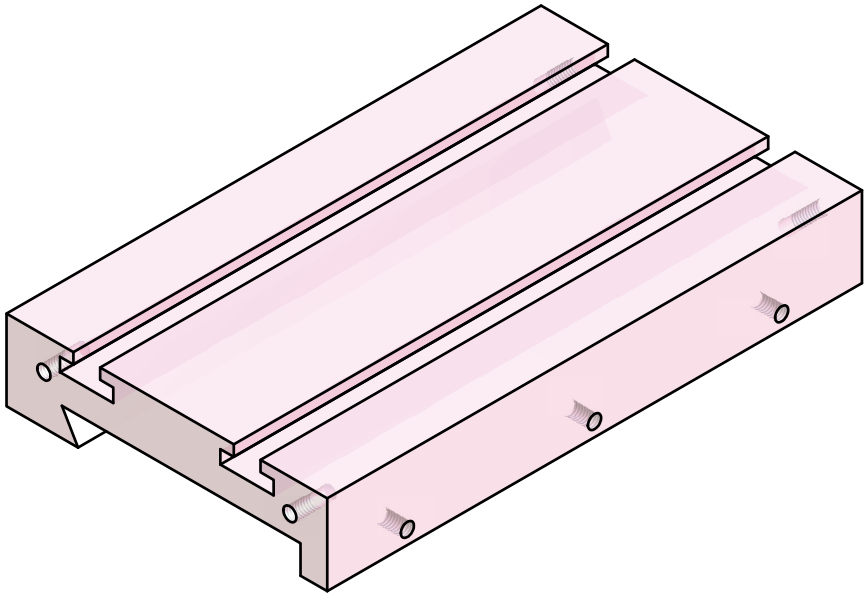

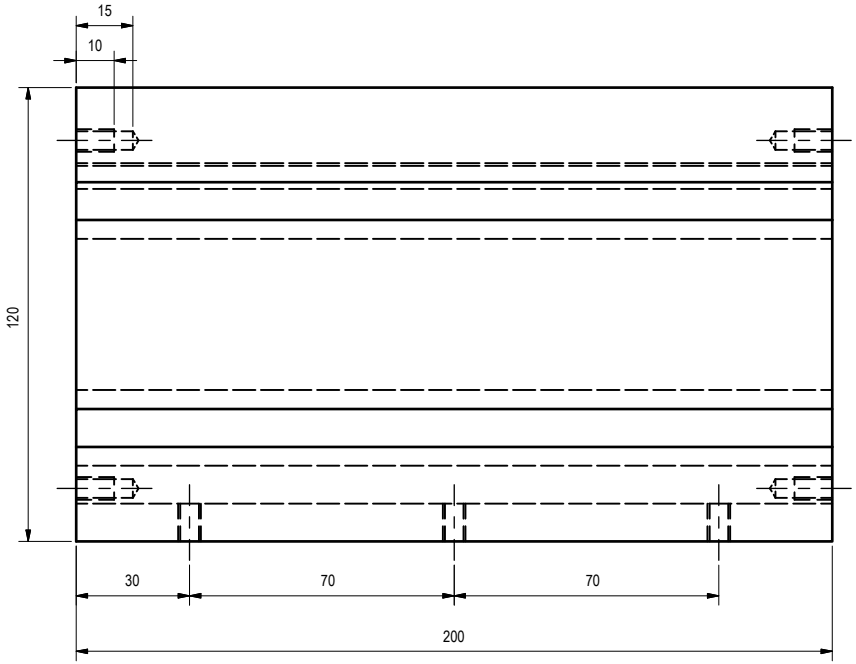

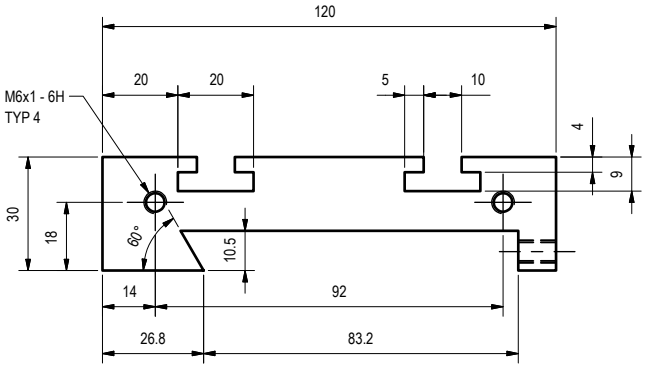

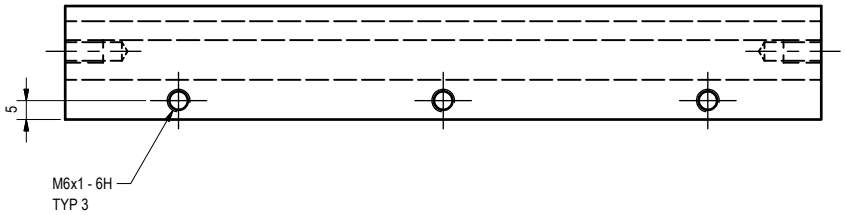

Bench Type Centre Lathe

Part Name:	Corss Slide
Part No:	LatheCrossSlide
Dwg No:	LatheCrossSlide
Drn By:	iccfsin
Date:	05/2003
File:	LatheCrossSlide.ipt
Rev No:	
Rev By:	iccfsin
Date:	
Qty:	1
Material:	CAST IRON
Scale:	1 : 2

DO NOT SCALE DRAWING

PROJECTION

GENERAL MACHINING TOLERANCE
.X ± 0.20
.XX ± 0.05
0 TO 250 ± 0.5
500 & ABOVE ± 2.0
TIR ± 0.20
ANGULAR ± 1/4°

THE HONG KONG POLYTECHNIC UNIVERSITY
INDUSTRIAL CENTRE

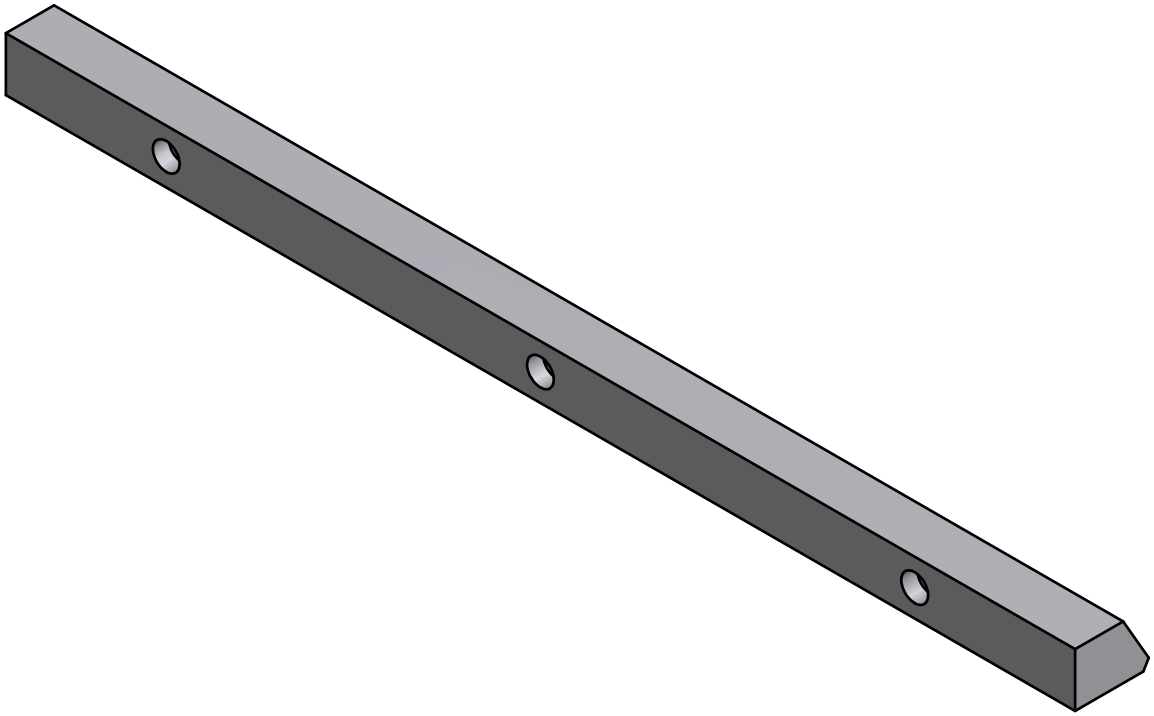

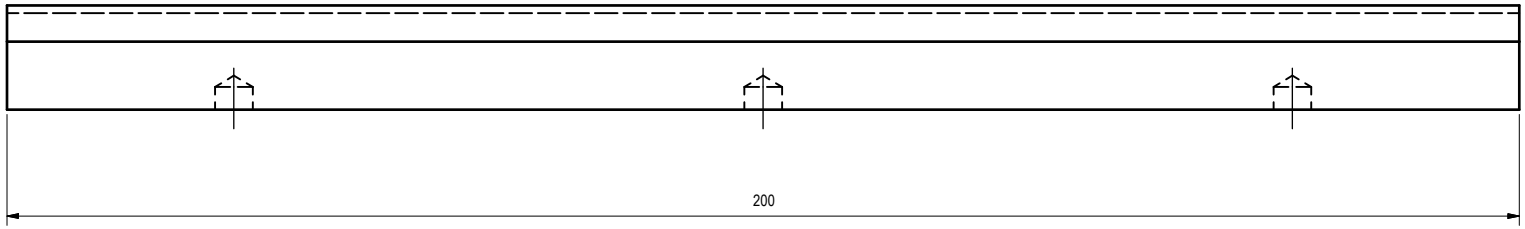

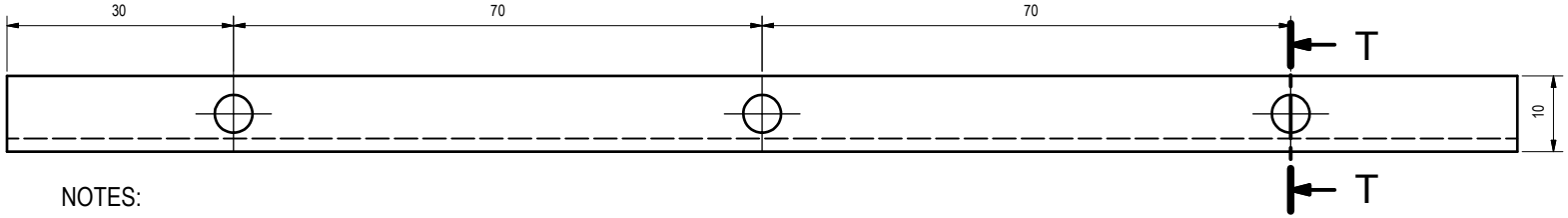

T-T

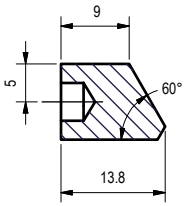

NOTES:

ALL CHAMFERS TO BE 2X45°

Bench Type Centre Lathe

Part Name:	Cross Slide Grip
Part No:	LatheCrossSlideGrip
Dwg No:	LatheCrossSlideGrip
Drn By:	iccfsin
Date:	05/2003
File:	LatheCrossSlideGrip.ipt
Rev No:	
Rev By:	iccfsin
Date:	
Qty:	1
Material:	MILD STEEL
Scale:	1 : 1

DO NOT SCALE DRAWING

PROJECTION

GENERAL MACHINING TOLERANCE
.X ± 0.20
.XX ± 0.05
0 TO 250 ± 0.5
500 & ABOVE ± 2.0
TIR ± 0.20
ANGULAR ± 1/4°

THE HONG KONG POLYTECHNIC UNIVERSITY
INDUSTRIAL CENTRE

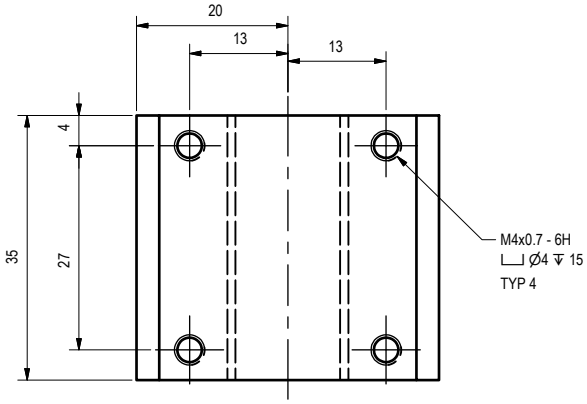

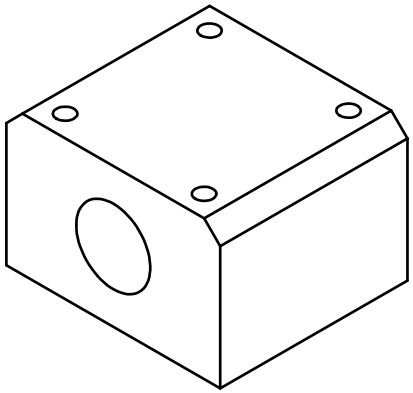

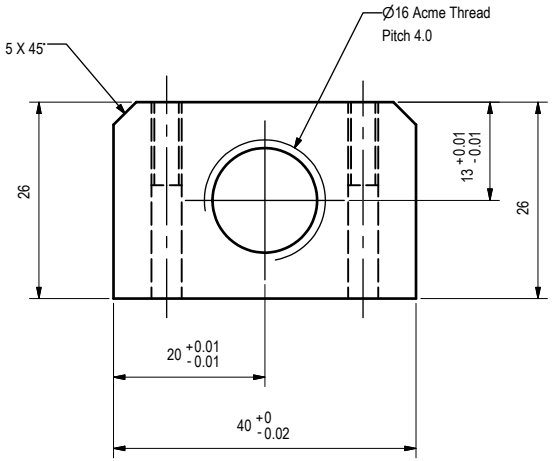

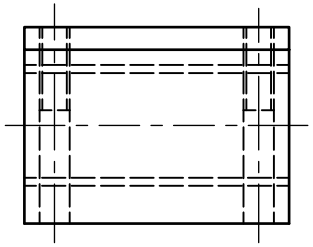

Bench Type Centre Lathe

Part Name:	Lead Screw Nut
Part No:	LatheLeadScrewNut
Dwg No:	LatheLeadScrewNut
Drn By:	iccfsin
Date:	05/2003
File:	LatheLeadScrewNut.ipt
Rev No:	
Rev By:	iccfsin
Date:	
Qty:	1
Material:	BRONZE
Scale:	1 : 1

DO NOT SCALE DRAWING

PROJECTION

GENERAL MACHINING TOLERANCE
.X ± 0.20
.XX ± 0.05
0 TO 250 ± 0.5
500 & ABOVE ± 2.0
TIR ± 0.20
ANGULAR ± 1/4°

THE HONG KONG
POLYTECHNIC UNIVERSITY
INDUSTRIAL CENTRE

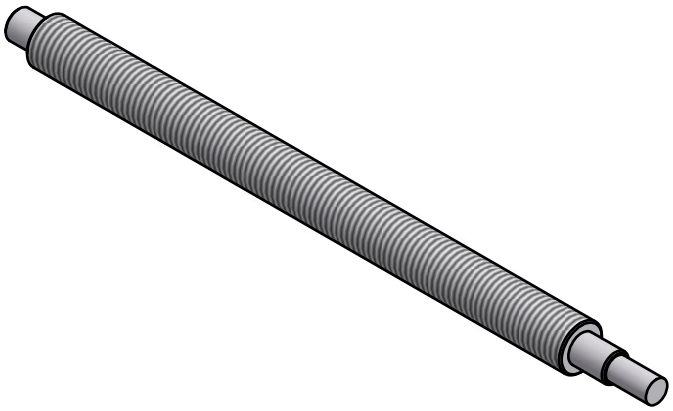

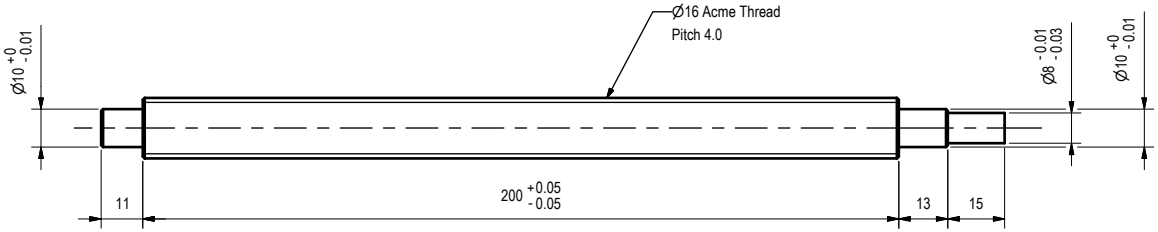

Bench Type Centre Lathe

Part Name:	Cross Slide Screw
Part No:	LatheCrossSlideFeedScrew
Dwg No:	LatheCrossSlideFeedScrew
Drn By:	iccfsin
Date:	05/2003
File:	LatheCrossSlideFeedScrew.ipt
Rev No:	
Rev By:	iccfsin
Date:	
Qty:	1
Material:	MILD STEEL
Scale:	1 : 2

DO NOT SCALE DRAWING

PROJECTION

GENERAL MACHINING TOLERANCE
.X ± 0.20
.XX ± 0.05
0 TO 250 ± 0.5
500 & ABOVE ± 2.0
TIR ± 0.20
ANGULAR ± 1/4°

THE HONG KONG POLYTECHNIC UNIVERSITY
INDUSTRIAL CENTRE

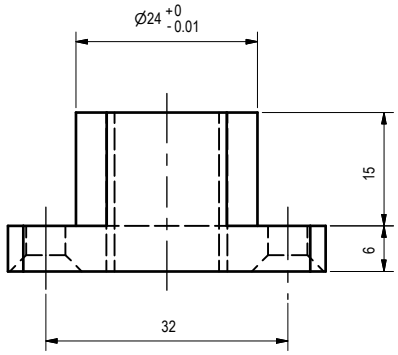

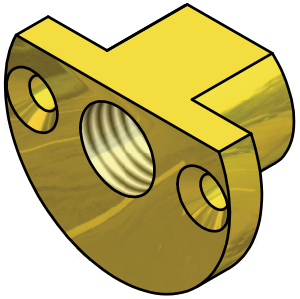

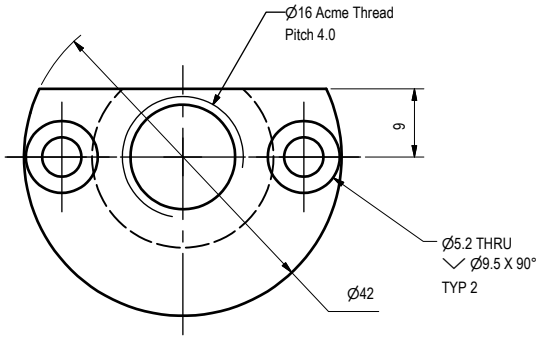

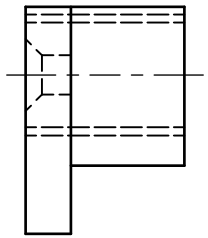

Bench Type Centre Lathe

Part Name:	Cross Slide Nut
Part No:	LatheCrossSlideLeadScrewNut
Dwg No:	LatheCrossSlideLeadScrewNut
Drn By:	iccfsin
Date:	05/2003
File:	LatheCrossSlideLeadScrewNut.ipt
Rev No:	
Rev By:	iccfsin
Date:	
Qty:	1
Material:	BRONZE
Scale:	1 : 1

DO NOT SCALE DRAWING

PROJECTION

GENERAL MACHINING TOLERANCE
.X ± 0.20
.XX ± 0.05
0 TO 250 ± 0.5
500 & ABOVE ± 2.0
TIR ± 0.20
ANGULAR ± 1/4°

THE HONG KONG
POLYTECHNIC UNIVERSITY
INDUSTRIAL CENTRE

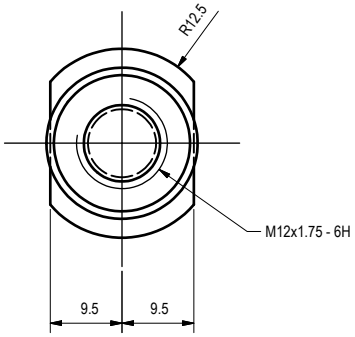

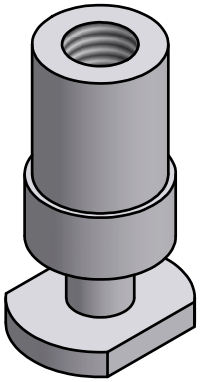

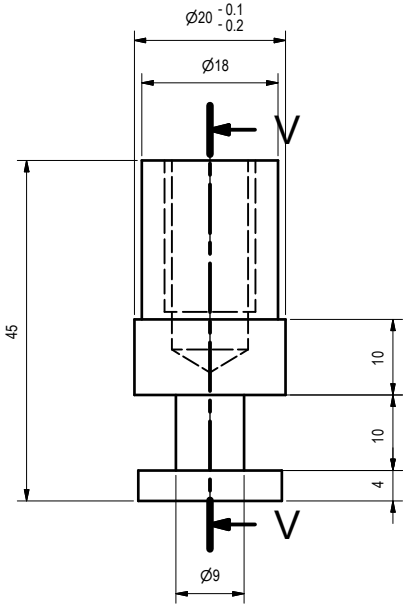

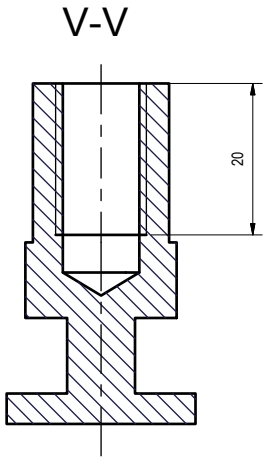

Bench Type Centre Lathe

Part Name:	Tool Post T-Nut
Part No:	LatheToolPostTeeNut
Dwg No:	LatheToolPostTeeNut
Drn By:	iccfsin
Date:	05/2003
File:	LatheToolPostTeeNut.ipt
Rev No:	
Rev By:	iccfsin
Date:	
Qty:	1
Material:	MILD STEEL
Scale:	1 : 1

DO NOT SCALE DRAWING

PROJECTION

GENERAL MACHINING TOLERANCE
.X ± 0.20
.XX ± 0.05
0 TO 250 ± 0.5
500 & ABOVE ± 2.0
TIR ± 0.20
ANGULAR ± 1/4°

THE HONG KONG POLYTECHNIC UNIVERSITY
INDUSTRIAL CENTRE

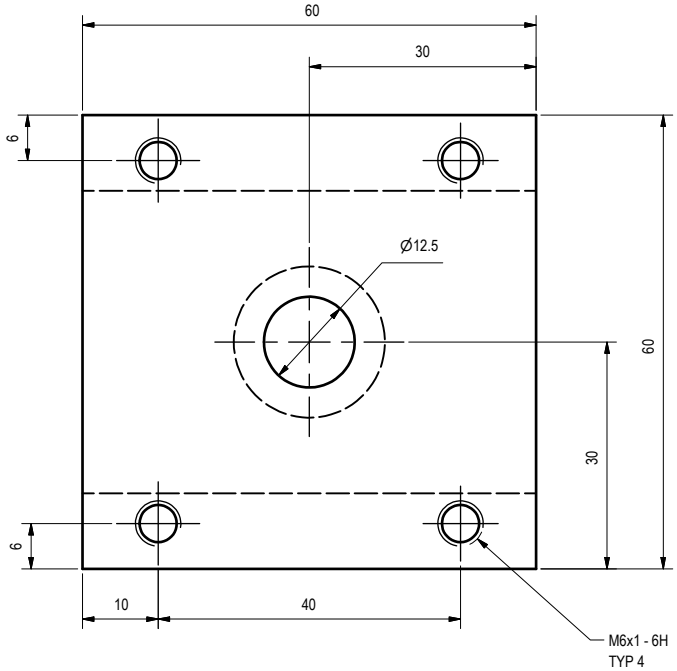

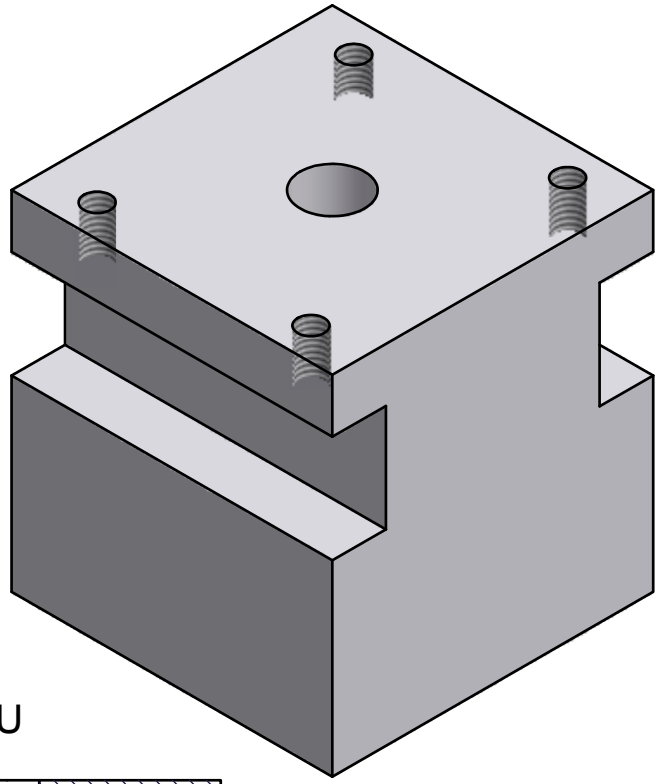

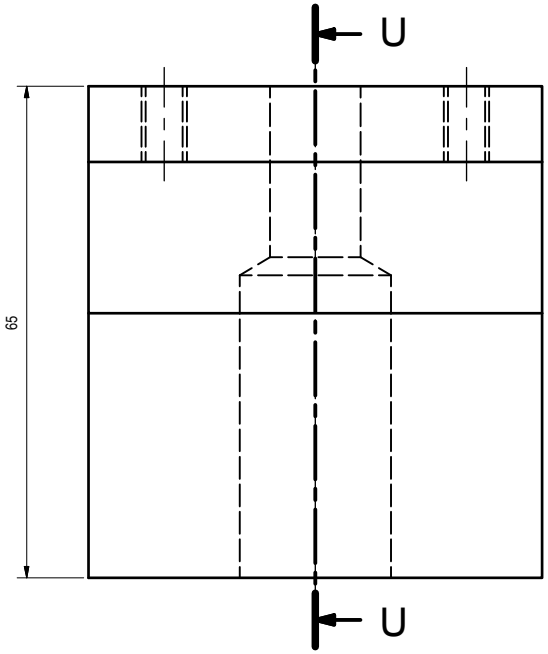

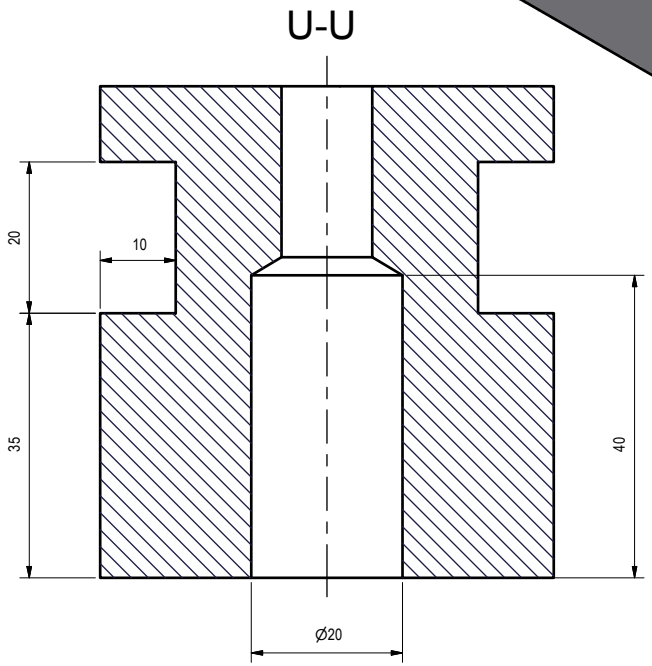

Bench Type Centre Lathe

Part Name:	Tool Post
Part No:	LatheToolPost
Dwg No:	LatheToolPost
Drn By:	iccfsin
Date:	05/2003
File:	LatheToolPost.ipt
Rev No:	
Rev By:	iccfsin
Date:	
Qty:	1
Material:	MILD STEEL
Scale:	1 : 1

DO NOT SCALE DRAWING

PROJECTION

GENERAL MACHINING TOLERANCE
.X ± 0.20
.XX ± 0.05
0 TO 250 ± 0.5
500 & ABOVE ± 2.0
TIR ± 0.20
ANGULAR ± 1/4°

THE HONG KONG POLYTECHNIC UNIVERSITY
INDUSTRIAL CENTRE

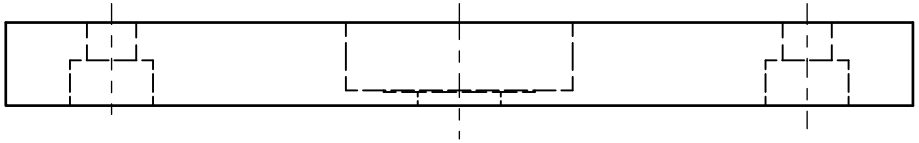

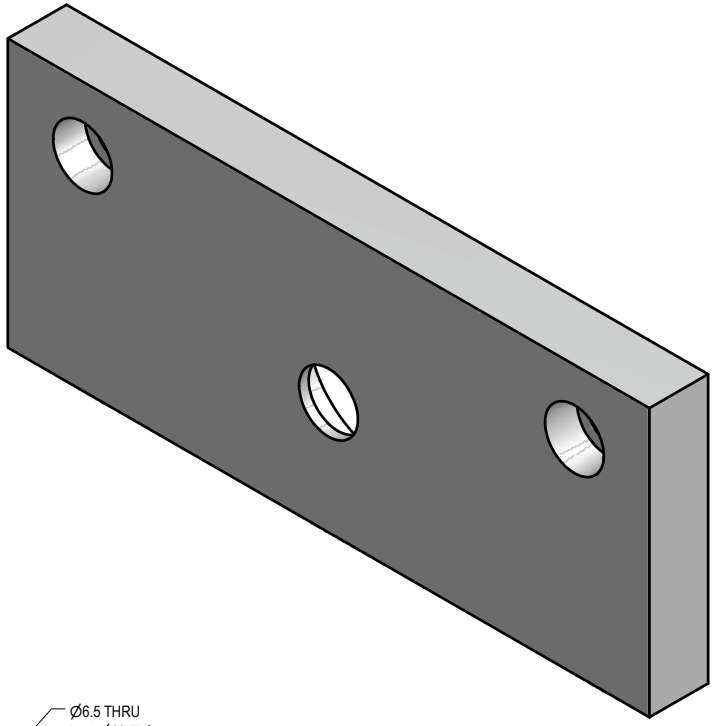

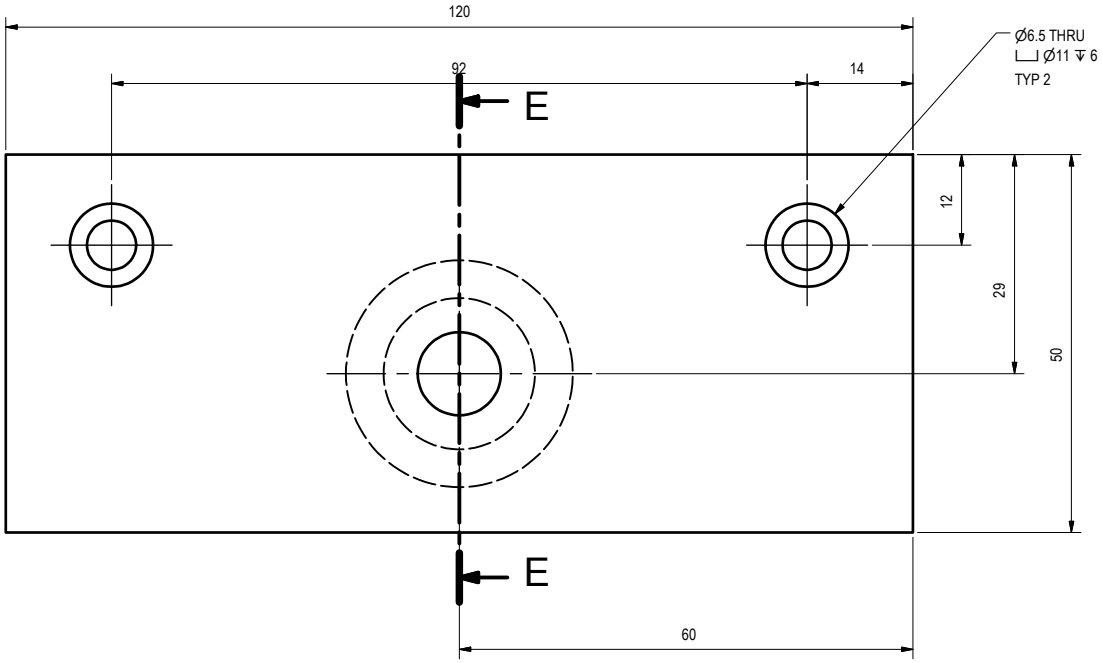

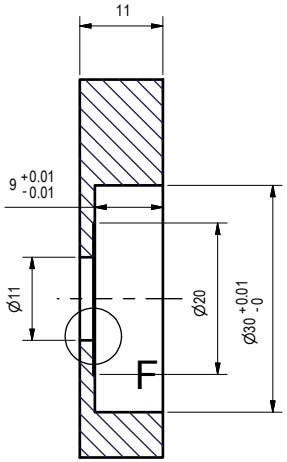

E-E

F (4 : 1)

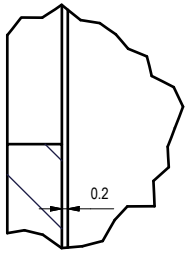

Bench Type Centre Lathe

Part Name:	Cross Slide Bearing Cover
Part No:	LatheCrossSlideBearHouse
Dwg No:	LatheCrossSlideBearHouse
Drn By:	iccfsin
Date:	05/2003
File:	LatheCrossSlideBearHouse.ipt
Rev No:	
Rev By:	iccfsin
Date:	
Qty:	2
Material:	ALUMINIUM
Scale:	1 : 1

DO NOT SCALE DRAWING

PROJECTION

GENERAL MACHINING TOLERANCE
.X ± 0.20
.XX ± 0.05
0 TO 250 ± 0.5
500 & ABOVE ± 2.0
TIR ± 0.20
ANGULAR ± 1/4°

THE HONG KONG POLYTECHNIC UNIVERSITY
INDUSTRIAL CENTRE

NOTES:
1. ALL FILLETS TO BE R2 UNLESS OTHERWISE SPECIFIED

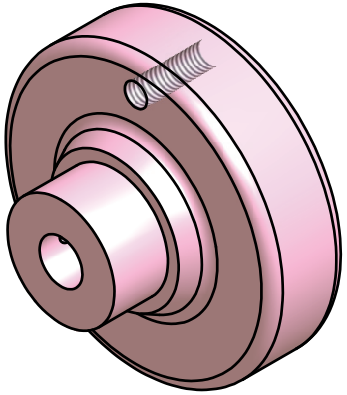

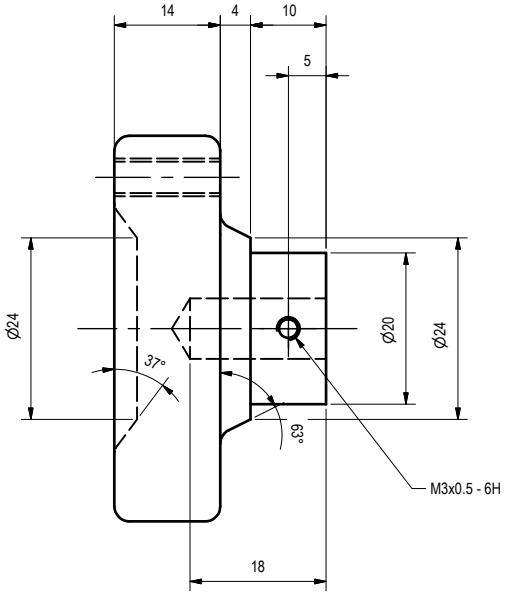

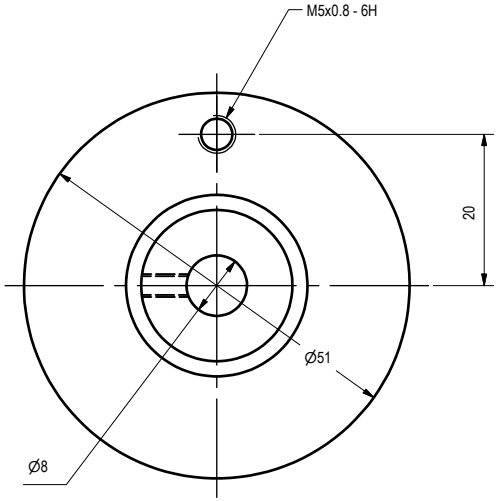

Bench Type Centre Lathe

Part Name:	Cross Slide Hand Wheel
Part No:	LatheHandWheel2
Dwg No:	LatheHandWheel2
Drn By:	iccfsin
Date:	05/2003
File:	LatheHandWheel2.ipt
Rev No:	
Rev By:	iccfsin
Date:	
Qty:	2
Material:	ALUMINIUM
Scale:	1 : 1

DO NOT SCALE DRAWING

PROJECTION

GENERAL MACHINING TOLERANCE
.X ± 0.20
.XX ± 0.05
0 TO 250 ± 0.5
500 & ABOVE ± 2.0
TIR ± 0.20
ANGULAR ± 1/4°

THE HONG KONG POLYTECHNIC UNIVERSITY
INDUSTRIAL CENTRE

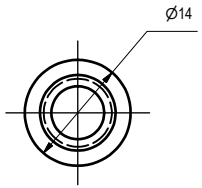

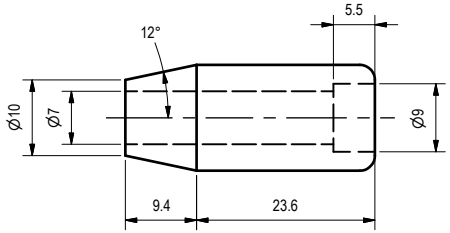

Bench Type Centre Lathe

Part Name:	Cross Slide Handle
Part No:	mm05010
Dwg No:	mm05010
Drn By:	iccfsin
Date:	05/2003
File:	LatheCrossSlideHandle.ipt
Rev No:	
Rev By:	iccfsin
Date:	
Qty:	2
Material:	ALUMINIUM
Scale:	1 : 1

DO NOT SCALE DRAWING

PROJECTION

GENERAL MACHINING TOLERANCE
.X ± 0.20
.XX ± 0.05
0 TO 250 ± 0.5
500 & ABOVE ± 2.0
TIR ± 0.20
ANGULAR ± 1/4°

THE HONG KONG POLYTECHNIC UNIVERSITY
INDUSTRIAL CENTRE

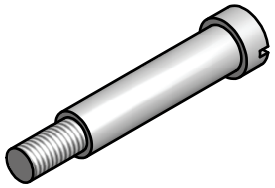

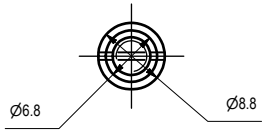

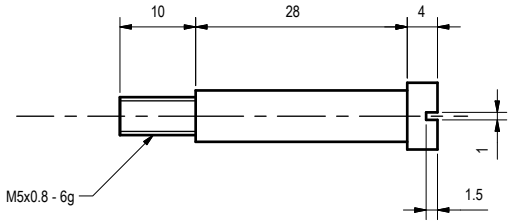

Bench Type Centre Lathe

Part Name:	Cross Slide Handle Pin
Part No:	mm05009
Dwg No:	mm05009
Drn By:	iccfsin
Date:	05/2003
File:	LatheCrossSlideHandlePin.ipt
Rev No:	
Rev By:	iccfsin
Date:	
Qty:	2
Material:	MILD STEEL
Scale:	1 : 1

DO NOT SCALE DRAWING

PROJECTION

GENERAL MACHINING TOLERANCE
.X ± 0.20
.XX ± 0.05
0 TO 250 ± 0.5
500 & ABOVE ± 2.0
TIR ± 0.20
ANGULAR ± 1/4°

THE HONG KONG POLYTECHNIC UNIVERSITY
INDUSTRIAL CENTRE

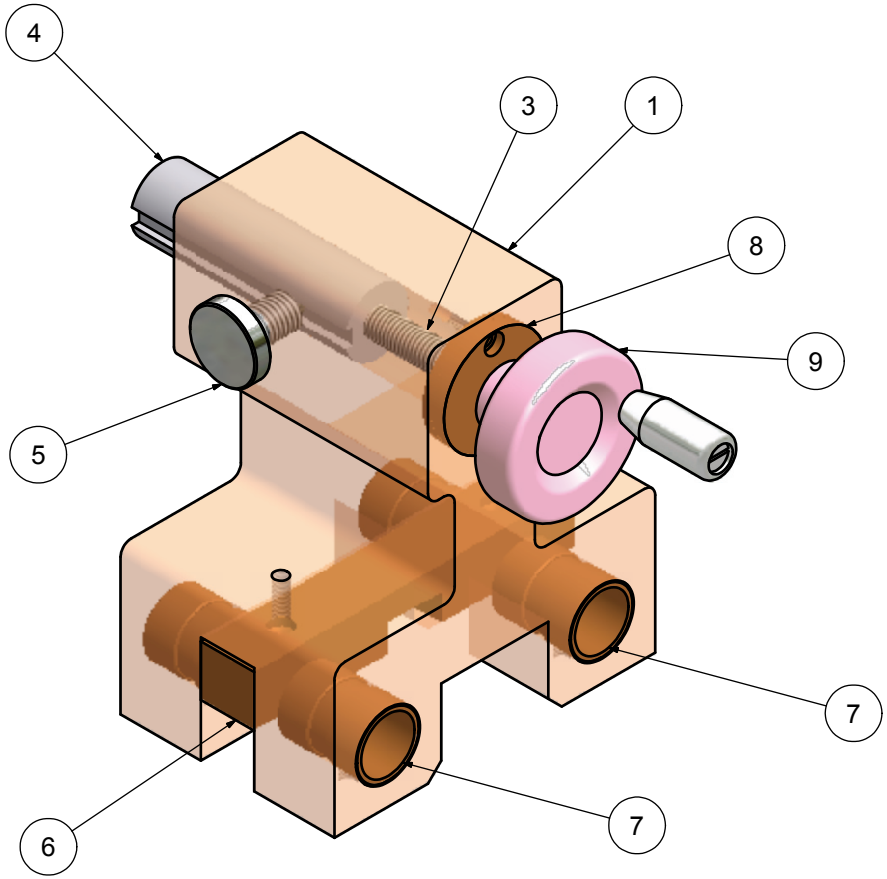

Parts List			
ITEM	QTY	PART NUMBER	DESCRIPTION
9	1	LatheHandWheel2	Tail Stock Hand Wheel
8	1	LatheTailStockFeedScrewCover	Tail Stock Screw Cover
7	4	LatheTailStockShaftBush	Shaft Bush
6	1	LatheTailStockGrip	Tail Stock Grip
5	1	LatheTailStockLockScrew	Tail Stock Lock
4	1	LatheTailStorkSpindle	Tail Stock Spindle
3	1	LatheTailStockFeedScrew	Tail Stock Screw
2	1	LatheTailStockFeedScrewHousing	Tail Stock Screw Housing
1	1	LatheTailStockMainBody	Tail Stock

Bench Type Centre Lathe

Part Name:

Part No: LatheTailStock

Dwg No: LatheTailStock

Drn By: iccfsin

Date: 05/2003

File: LatheTailStock.iam

Rev No:

Rev By: iccfsin

Date:

Qty:

Material:

Scale:

DO NOT SCALE DRAWING

PROJECTION

GENERAL MACHINING TOLERANCE
.X ± 0.20
.XX ± 0.05
0 TO 250 ± 0.5
500 & ABOVE ± 2.0
TIR ± 0.20
ANGULAR ± 1/4°

THE HONG KONG POLYTECHNIC UNIVERSITY
INDUSTRIAL CENTRE

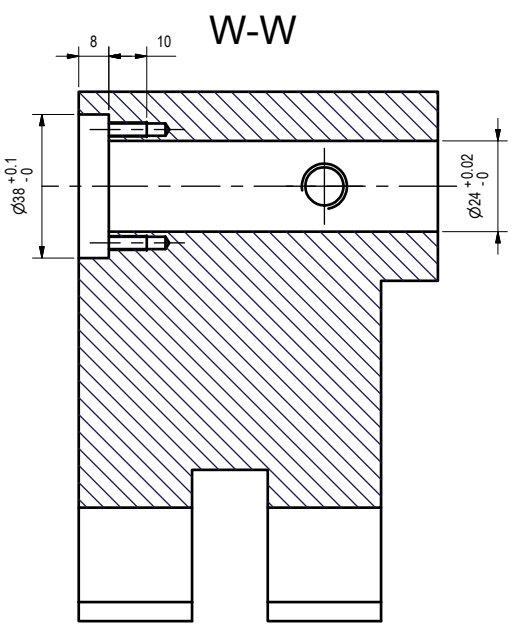

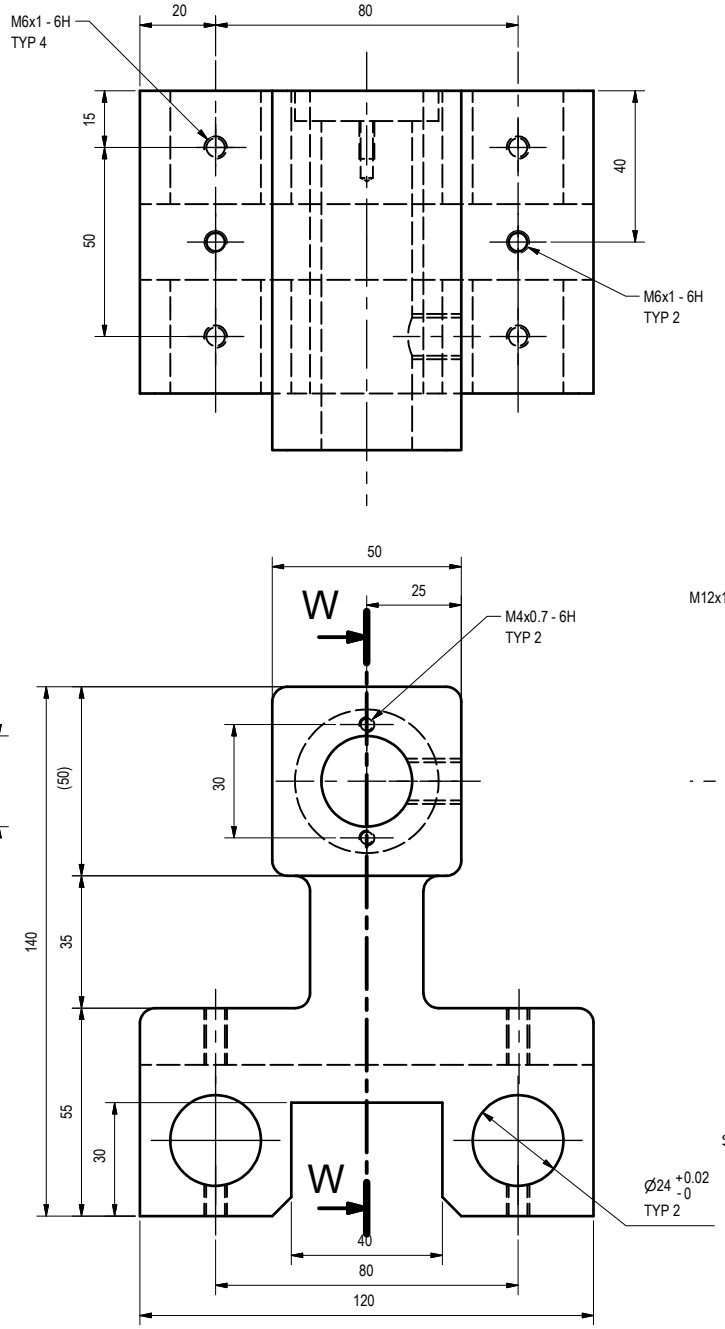

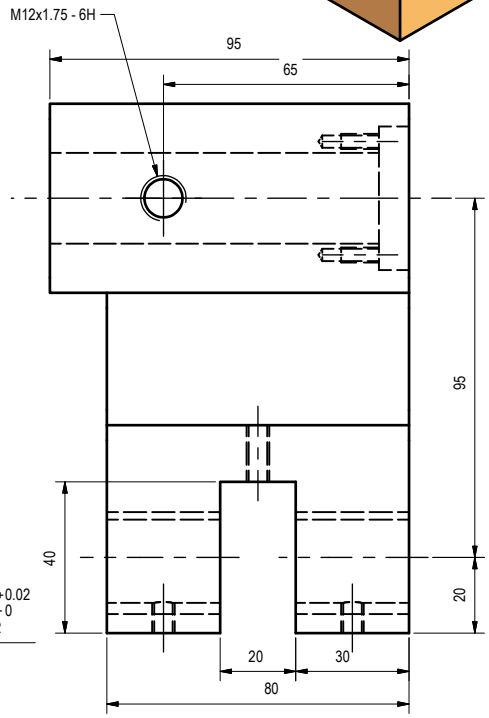

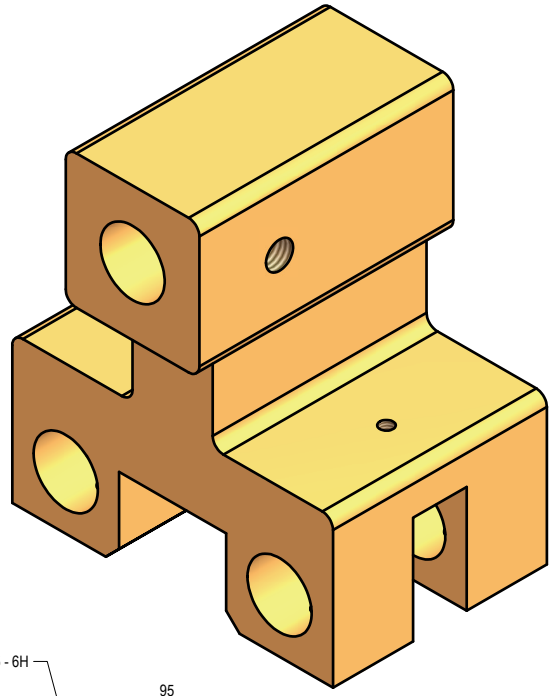

Bench Type Centre Lathe

Part Name:	Tail Stock
Part No:	LatheTailStockMainBody
Dwg No:	LatheTailStockMainBody
Drn By:	iccfsin
Date:	05/2003
File:	LatheTailStockMainBody.ipt
Rev No:	
Rev By:	iccfsin
Date:	
Qty:	1
Material:	ALUMINIUM
Scale:	1 : 2

DO NOT SCALE DRAWING

PROJECTION

GENERAL MACHINING TOLERANCE
.X ± 0.20
.XX ± 0.05
0 TO 250 ± 0.5
500 & ABOVE ± 2.0
TIR ± 0.20
ANGULAR ± 1/4°

THE HONG KONG POLYTECHNIC UNIVERSITY
INDUSTRIAL CENTRE

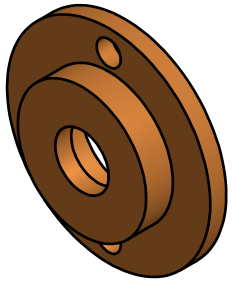

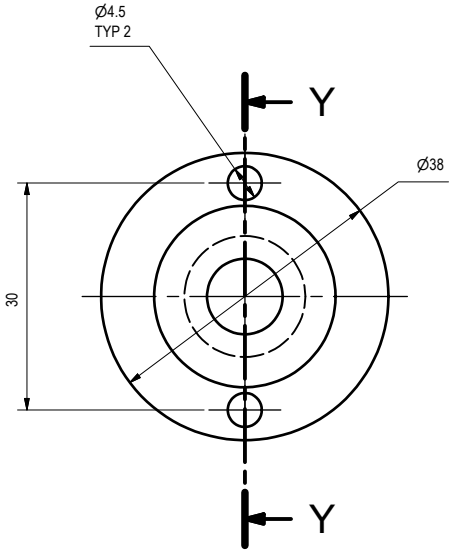

Y-Y

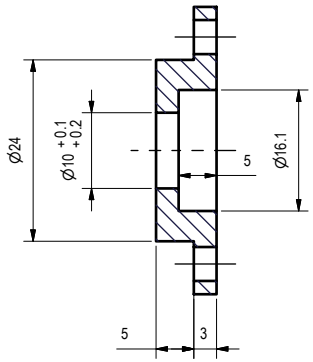

Bench Type Centre Lathe

Part Name:	Tail Stock Feedscrew Housing
Part No:	LatheTailStockFeedScrewHousing
Dwg No:	LatheTailStockFeedScrewHousing
Drn By:	iccfsin
Date:	05/2003
File:	LatheTailStockFeedScrewHousing.ipt
Rev No:	
Rev By:	iccfsin
Date:	
Qty:	1
Material:	BRONZE
Scale:	1 : 1

DO NOT SCALE DRAWING

PROJECTION

GENERAL MACHINING TOLERANCE
.X ± 0.20
.XX ± 0.05
0 TO 250 ± 0.5
500 & ABOVE ± 2.0
TIR ± 0.20
ANGULAR ± 1/4°

THE HONG KONG
POLYTECHNIC UNIVERSITY
INDUSTRIAL CENTRE

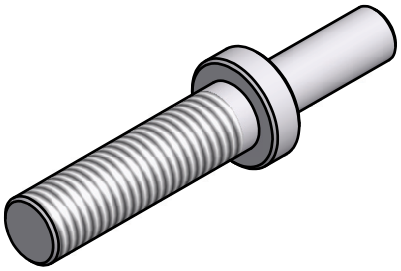

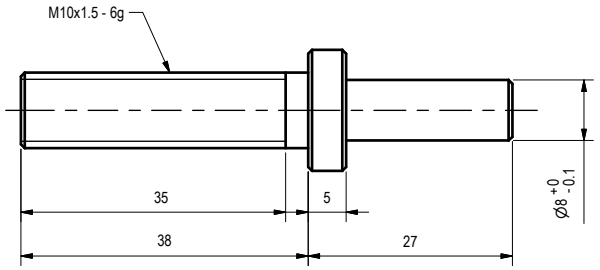

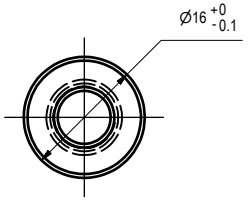

NOTES :

ALL CHAMFERS TO BE 1 X 45°

Bench Type Centre Lathe

Part Name:	Tail Stock Feedscrew
Part No:	LatheTailStockFeedScrew
Dwg No:	LatheTailStockFeedScrew
Drn By:	iccfsin
Date:	05/2003
File:	LatheTailStockFeedScrew.ipt
Rev No:	
Rev By:	iccfsin
Date:	
Qty:	1
Material:	MILD STEEL
Scale:	1 : 1

DO NOT SCALE DRAWING

PROJECTION

GENERAL MACHINING TOLERANCE

.X ± 0.20
.XX ± 0.05
0 TO 250 ± 0.5
500 & ABOVE ± 2.0
TIR ± 0.20
ANGULAR ± 1/4°

THE HONG KONG POLYTECHNIC UNIVERSITY

INDUSTRIAL CENTRE

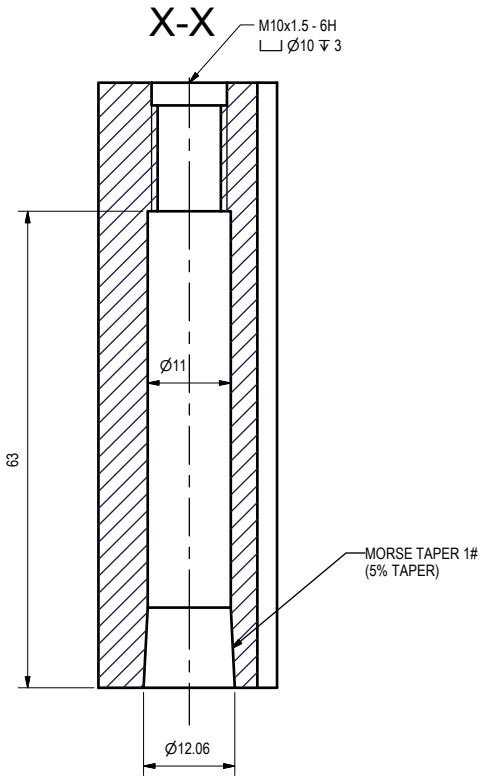

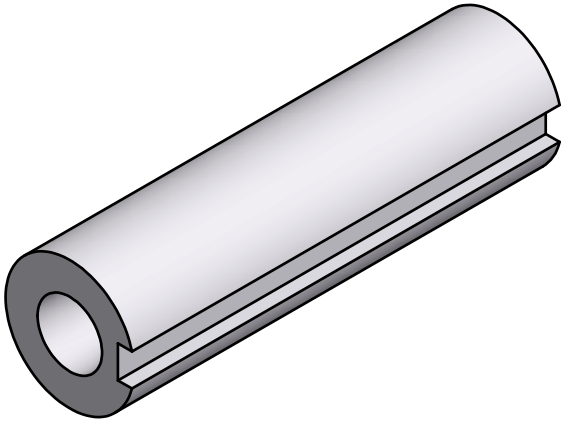

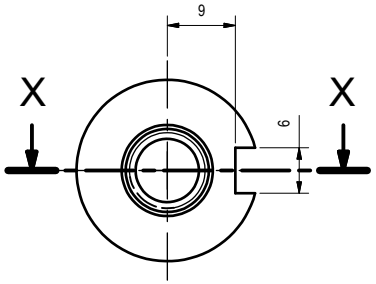

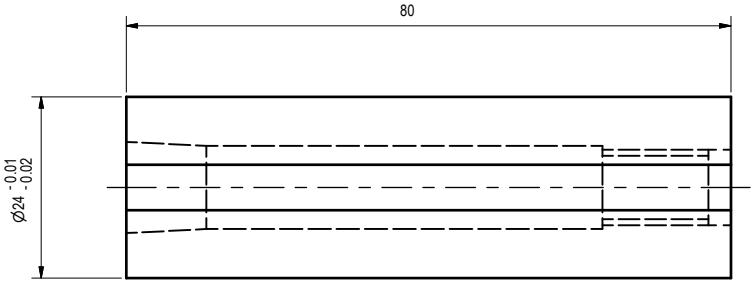

Bench Type Centre Lathe

Part Name:	Tail Stock Spindle
Part No:	LatheTailStorkSpindle
Dwg No:	LatheTailStorkSpindle
Drn By:	iccfsin
Date:	05/2003
File:	LatheTailStorkSpindle.ipt
Rev No:	
Rev By:	iccfsin
Date:	
Qty:	1
Material:	MILD STEEL
Scale:	1 : 1

DO NOT SCALE DRAWING

PROJECTION

GENERAL MACHINING TOLERANCE
.X ± 0.20
.XX ± 0.05
0 TO 250 ± 0.5
500 & ABOVE ± 2.0
TIR ± 0.20
ANGULAR ± 1/4°

THE HONG KONG
POLYTECHNIC UNIVERSITY
INDUSTRIAL CENTRE

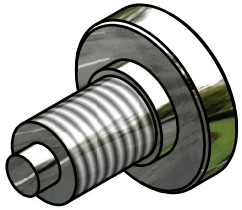

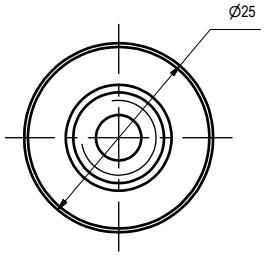

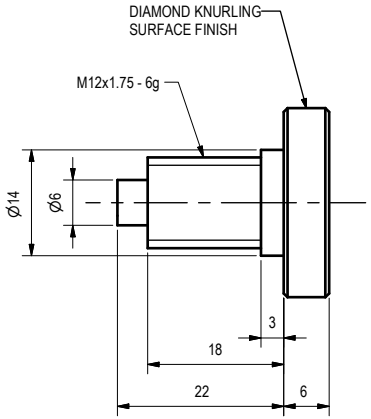

Bench Type Centre Lathe

Part Name:	Tail Stock Spindle Lock
Part No:	LatheTailStockLockScrew
Dwg No:	LatheTailStockLockScrew
Drn By:	iccfsin
Date:	05/2003
File:	LatheTailStockLockScrew.ipt
Rev No:	
Rev By:	iccfsin
Date:	
Qty:	1
Material:	M CARBON STEEL
Scale:	1 : 1

DO NOT SCALE DRAWING

PROJECTION

GENERAL MACHINING TOLERANCE
.X ± 0.20
.XX ± 0.05
0 TO 250 ± 0.5
500 & ABOVE ± 2.0
TIR ± 0.20
ANGULAR ± 1/4°

THE HONG KONG
POLYTECHNIC UNIVERSITY
INDUSTRIAL CENTRE

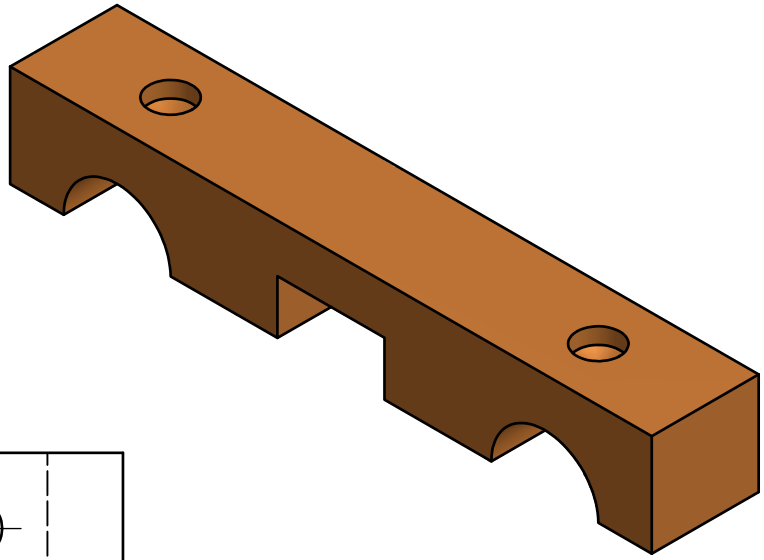

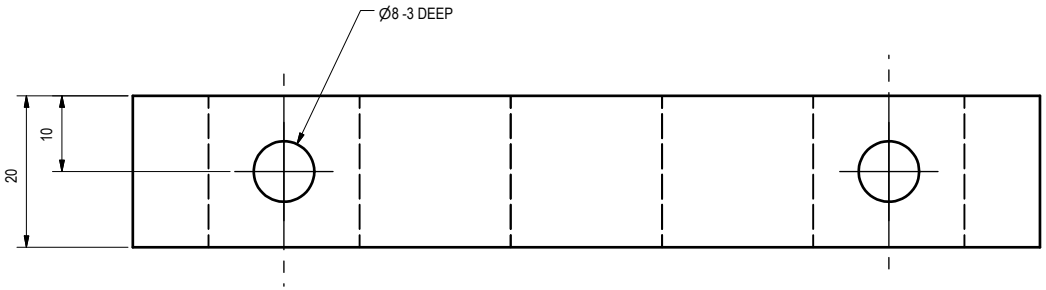

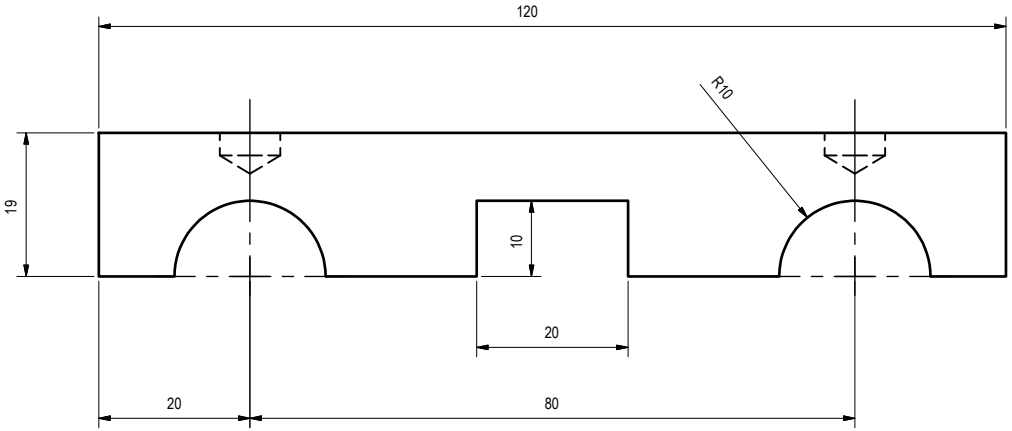

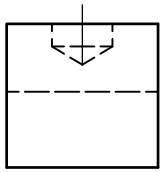

Bench Type Centre Lathe

Part Name:	Tail Stock Grip
Part No:	LatheTailStockGrip
Dwg No:	LatheTailStockGrip
Drn By:	iccfsin
Date:	05/2003
File:	LatheTailStockGrip.ipt
Rev No:	
Rev By:	iccfsin
Date:	
Qty:	1
Material:	COPPER
Scale:	1 : 1

DO NOT SCALE DRAWING

PROJECTION

GENERAL MACHINING TOLERANCE
.X ± 0.20
.XX ± 0.05
0 TO 250 ± 0.5
500 & ABOVE ± 2.0
TIR ± 0.20
ANGULAR ± 1/4°

THE HONG KONG POLYTECHNIC UNIVERSITY
INDUSTRIAL CENTRE

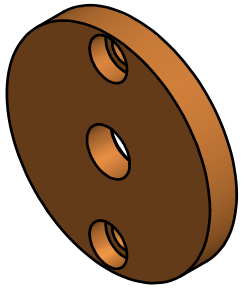

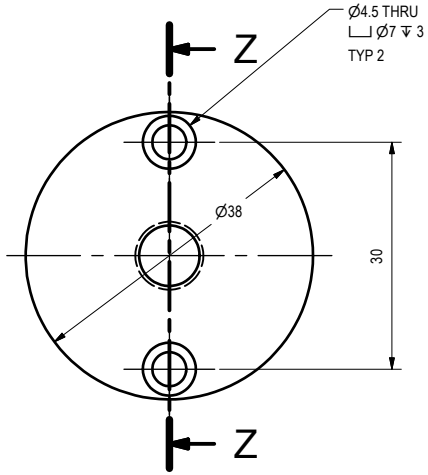

Z-Z

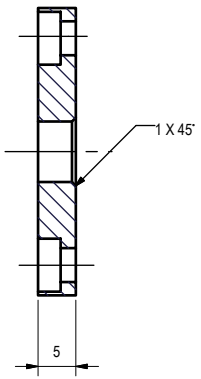

Bench Type Centre Lathe

Part Name:	Tail Stock Feedscrew Cover
Part No:	LatheTailStockFeedScrewCover
Dwg No:	LatheTailStockFeedScrewCover
Drn By:	iccfsin
Date:	05/2003
File:	LatheTailStockFeedScrewCover.ipt
Rev No:	
Rev By:	iccfsin
Date:	
Qty:	1
Material:	BRONZE
Scale:	1 : 1

DO NOT SCALE DRAWING

PROJECTION

GENERAL MACHINING TOLERANCE
.X ± 0.20
.XX ± 0.05
0 TO 250 ± 0.5
500 & ABOVE ± 2.0
TIR ± 0.20
ANGULAR ± 1/4°

THE HONG KONG POLYTECHNIC UNIVERSITY
INDUSTRIAL CENTRE

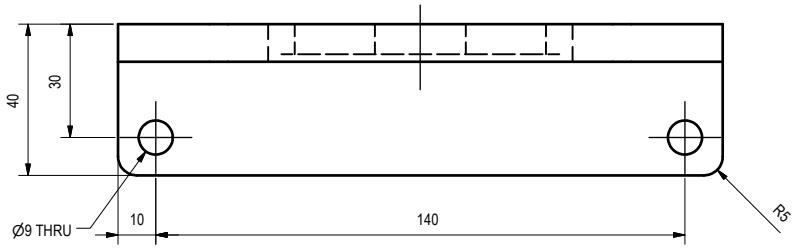

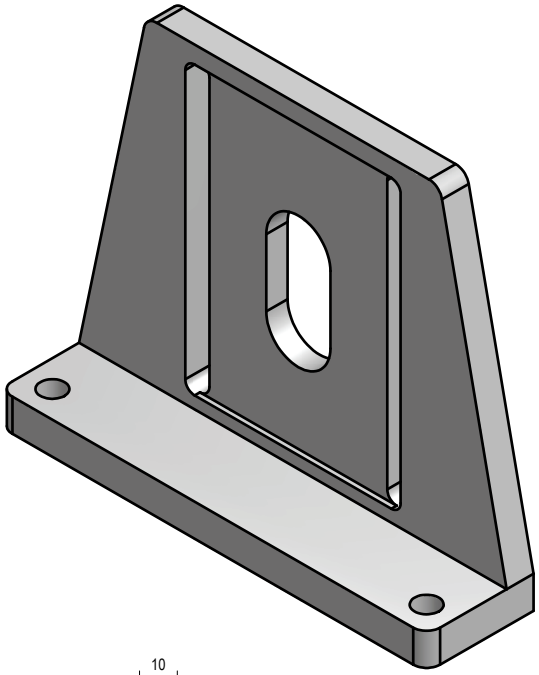

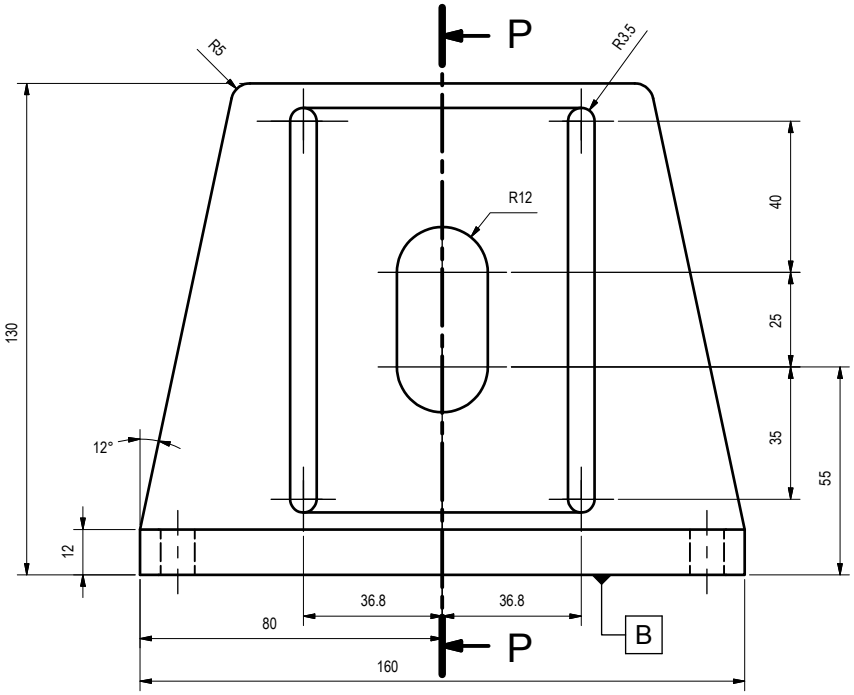

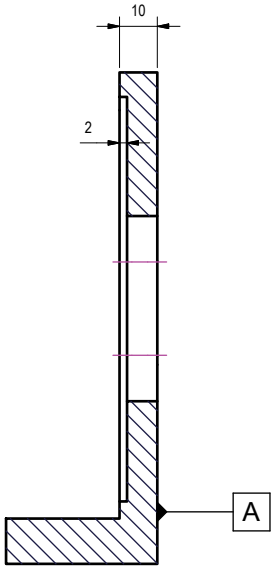

P-P

Bench Type Centre Lathe

Part Name:	Motor Mount
Part No:	MotorMount
Dwg No:	MotorMount
Drn By:	iccfsin
Date:	05/2003
File:	MotorMount.ipt
Rev No:	
Rev By:	iccfsin
Date:	
Qty:	1
Material:	ALUMINIUM
Scale:	1 : 2

DO NOT SCALE DRAWING

PROJECTION

GENERAL MACHINING TOLERANCE
.X ± 0.20
.XX ± 0.05
0 TO 250 ± 0.5
500 & ABOVE ± 2.0
TIR ± 0.20
ANGULAR ± 1/4°

THE HONG KONG POLYTECHNIC UNIVERSITY
INDUSTRIAL CENTRE

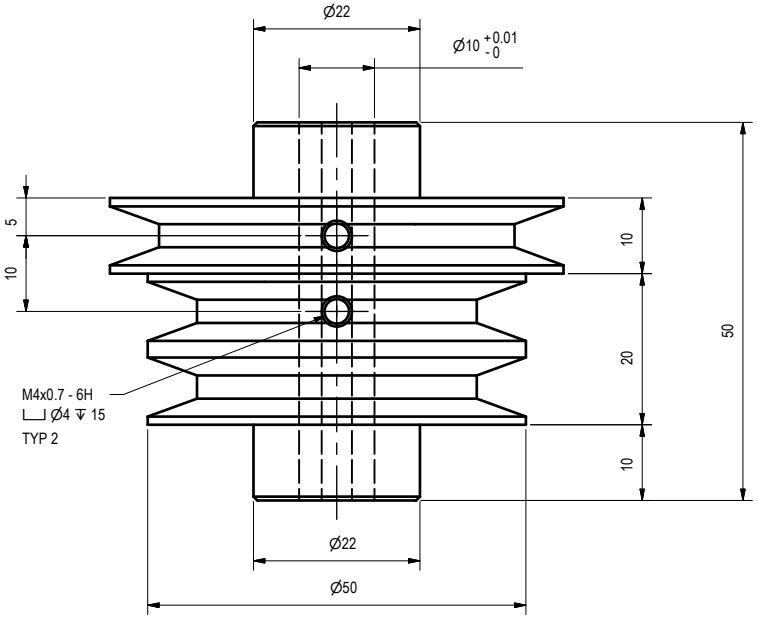

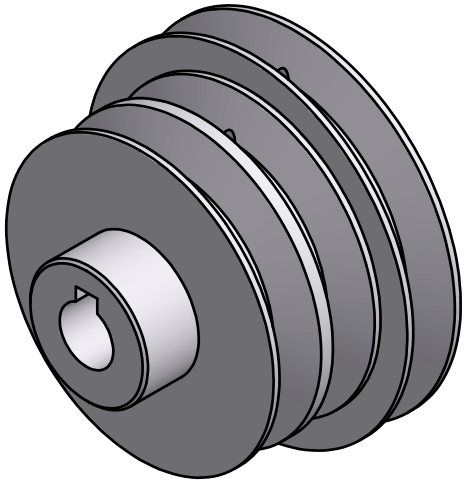

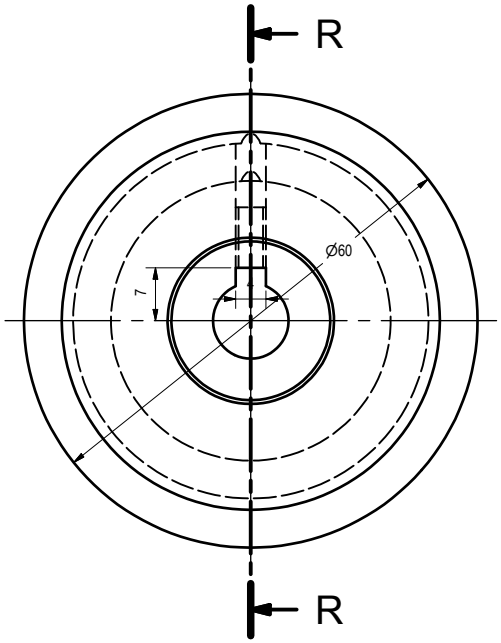

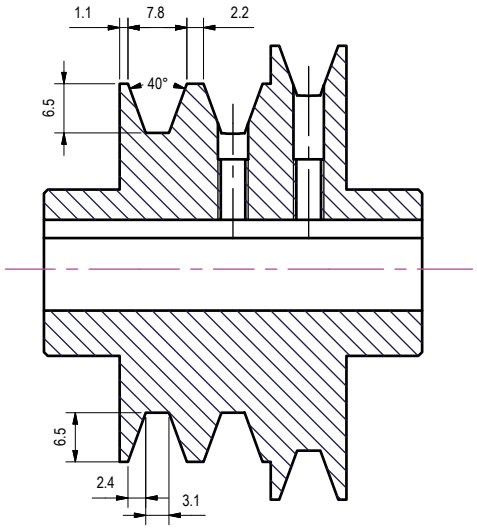

R-R

Bench Type Centre Lathe

Part Name:	Motor Pulley
Part No:	MotorPulley
Dwg No:	MotorPulley
Drn By:	iccfsin
Date:	05/2003
File:	MotorPulley.ipt
Rev No:	
Rev By:	iccfsin
Date:	
Qty:	1
Material:	ALUMINIUM
Scale:	1 : 1

DO NOT SCALE DRAWING

PROJECTION

GENERAL MACHINING TOLERANCE
.X ± 0.20
.XX ± 0.05
0 TO 250 ± 0.5
500 & ABOVE ± 2.0
TIR ± 0.20
ANGULAR ± 1/4°

THE HONG KONG POLYTECHNIC UNIVERSITY
INDUSTRIAL CENTRE

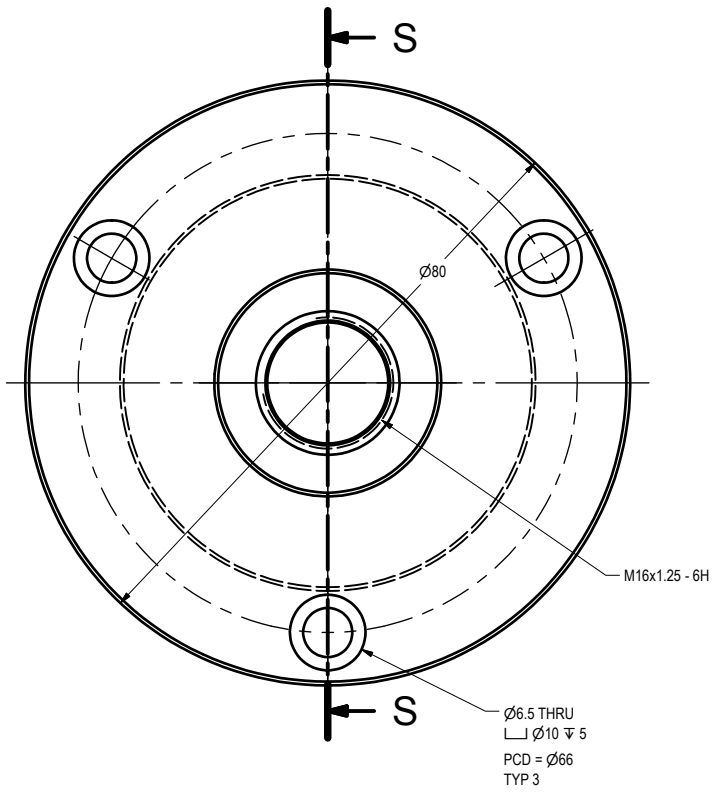

S-S

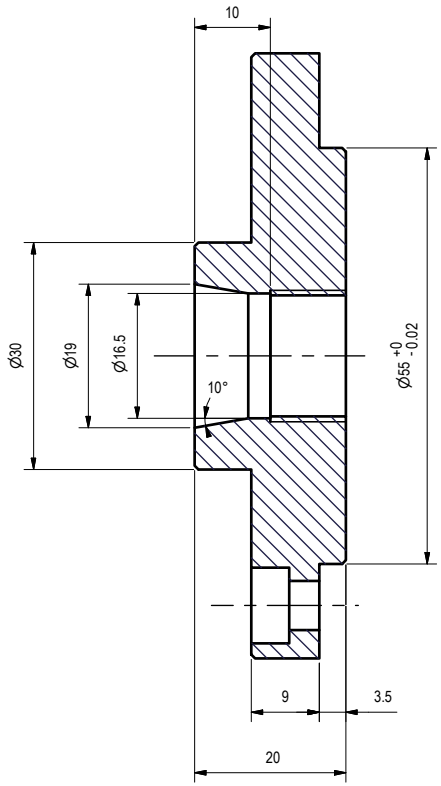

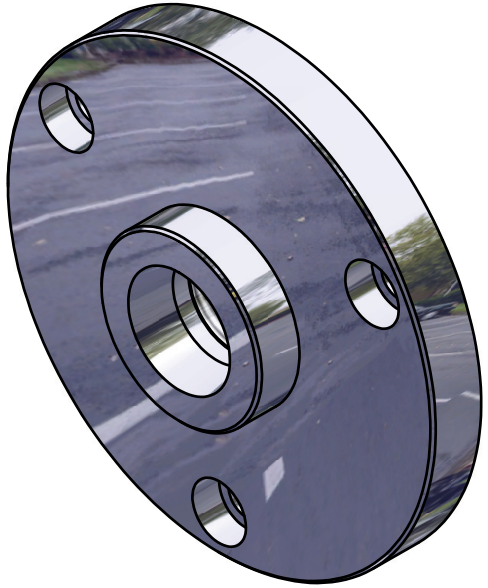

Bench Type Centre Lathe

Part Name:	Chuck Plate
Part No:	ChuckPlate
Dwg No:	ChuckPlate
Drn By:	iccfsin
Date:	05/2003
File:	ChuckPlate.ipt
Rev No:	
Rev By:	iccfsin
Date:	
Qty:	1
Material:	MILD STEEL
Scale:	1 : 1

DO NOT SCALE DRAWING

PROJECTION

GENERAL MACHINING TOLERANCE
.X ± 0.20
.XX ± 0.05
0 TO 250 ± 0.5
500 & ABOVE ± 2.0
TIR ± 0.20
ANGULAR ± 1/4°

THE HONG KONG POLYTECHNIC UNIVERSITY
INDUSTRIAL CENTRE

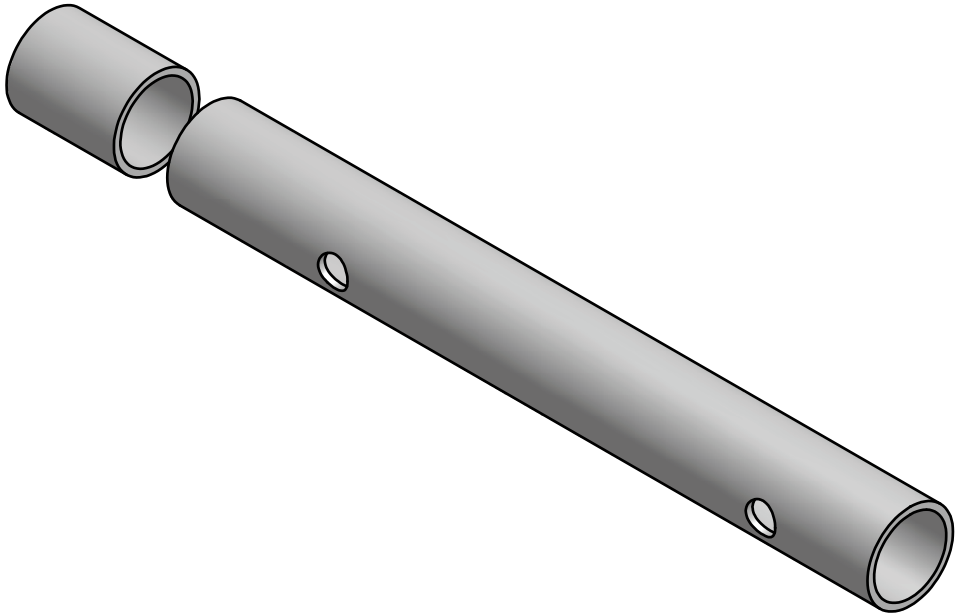

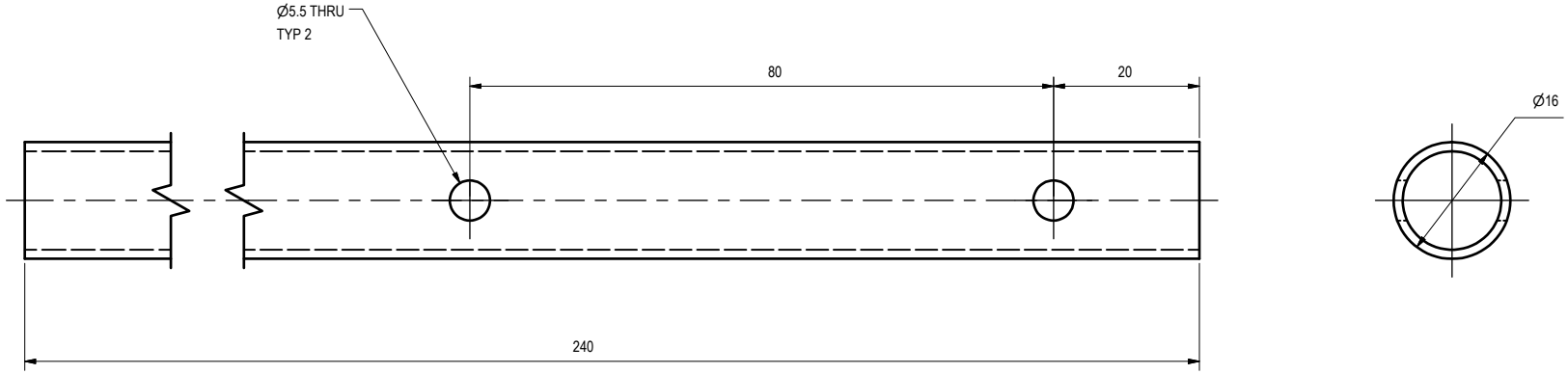

Bench Type Centre Lathe

Part Name:	Safety Gauge Tube
Part No:	SafetyGaugeTube
Dwg No:	SafetyGaugeTube
Drn By:	iccfsin
Date:	05/2003
File:	SafetyGaugeTube.ipt
Rev No:	
Rev By:	iccfsin
Date:	
Qty:	
Material:	SS Tube
Scale:	1 : 1

DO NOT SCALE DRAWING

PROJECTION

GENERAL MACHINING TOLERANCE
.X ± 0.20
.XX ± 0.05
0 TO 250 ± 0.5
500 & ABOVE ± 2.0
TIR ± 0.20
ANGULAR ± 1/4°

THE HONG KONG POLYTECHNIC UNIVERSITY
INDUSTRIAL CENTRE

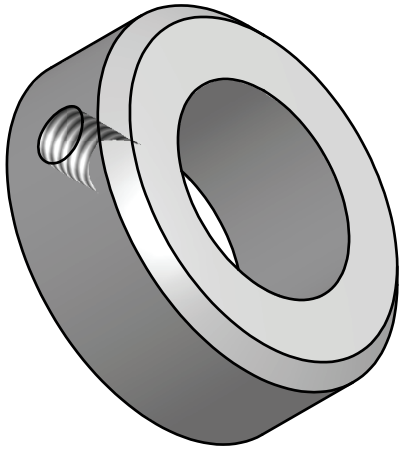

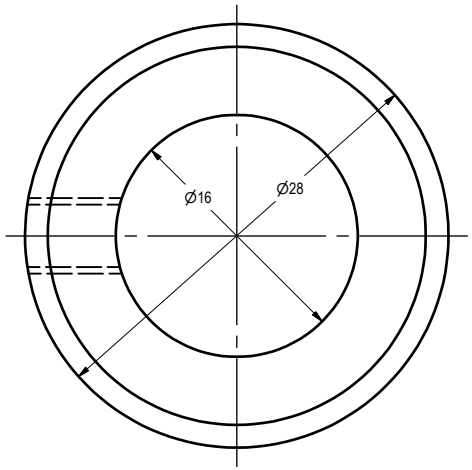

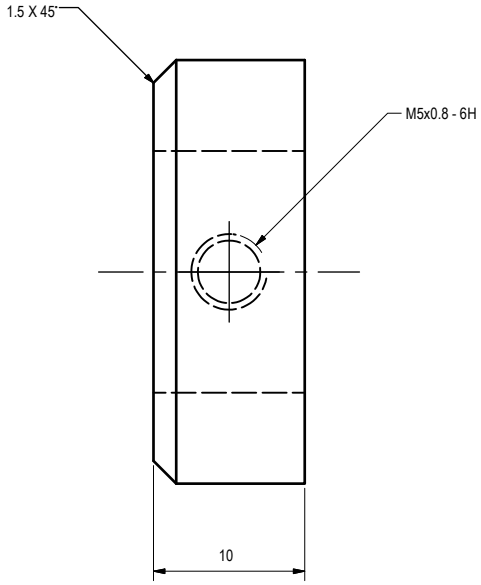

Bench Type Centre Lathe

Part Name:	Safety Gauge Holder1
Part No:	SafetyGaugeHolder1
Dwg No:	SafetyGaugeHolder1
Drn By:	iccfsin
Date:	05/2003
File:	SafetyGaugeHolder1.ipt
Rev No:	
Rev By:	iccfsin
Date:	
Qty:	
Material:	Mild Steel
Scale:	2 : 1

DO NOT SCALE DRAWING

PROJECTION

GENERAL MACHINING TOLERANCE
.X ± 0.20
.XX ± 0.05
0 TO 250 ± 0.5
500 & ABOVE ± 2.0
TIR ± 0.20
ANGULAR ± 1/4°

THE HONG KONG POLYTECHNIC UNIVERSITY
INDUSTRIAL CENTRE

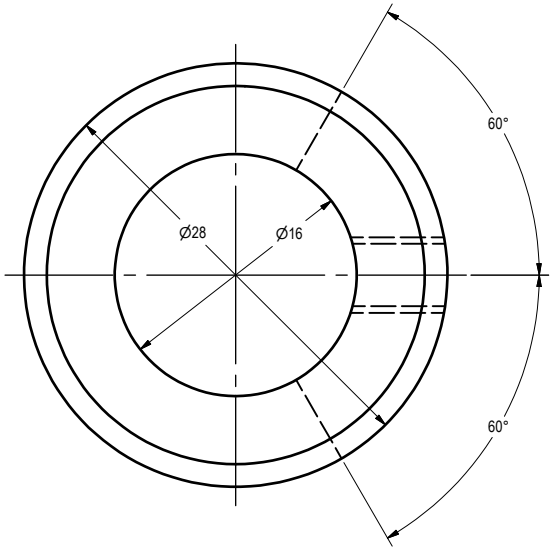

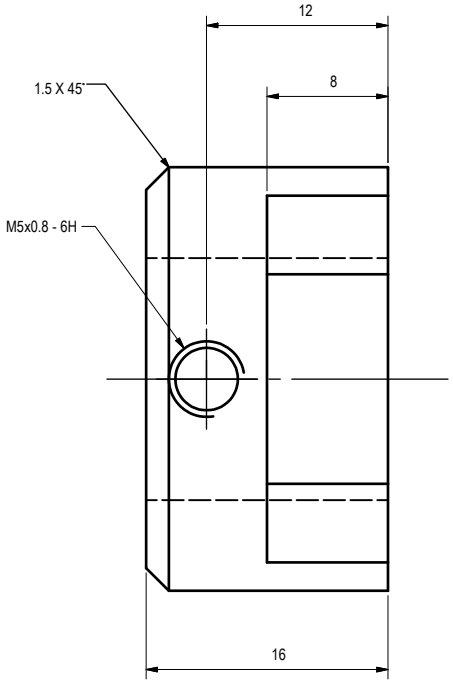

Bench Type Centre Lathe

Part Name:	Safety Gauge Holder2
Part No:	SafetyGaugeHolder2
Dwg No:	SafetyGaugeHolder2
Drn By:	iccfsin
Date:	05/2003
File:	SafetyGaugeHolder2.ipt
Rev No:	
Rev By:	iccfsin
Date:	
Qty:	
Material:	Mild Steel
Scale:	2 : 1

DO NOT SCALE DRAWING

PROJECTION

GENERAL MACHINING TOLERANCE
.X ± 0.20
.XX ± 0.05
0 TO 250 ± 0.5
500 & ABOVE ± 2.0
TIR ± 0.20
ANGULAR ± 1/4°

THE HONG KONG POLYTECHNIC UNIVERSITY
INDUSTRIAL CENTRE