SCHEMATIC FOR GLIDE FPV PLANE ELSR TRANSMITTER

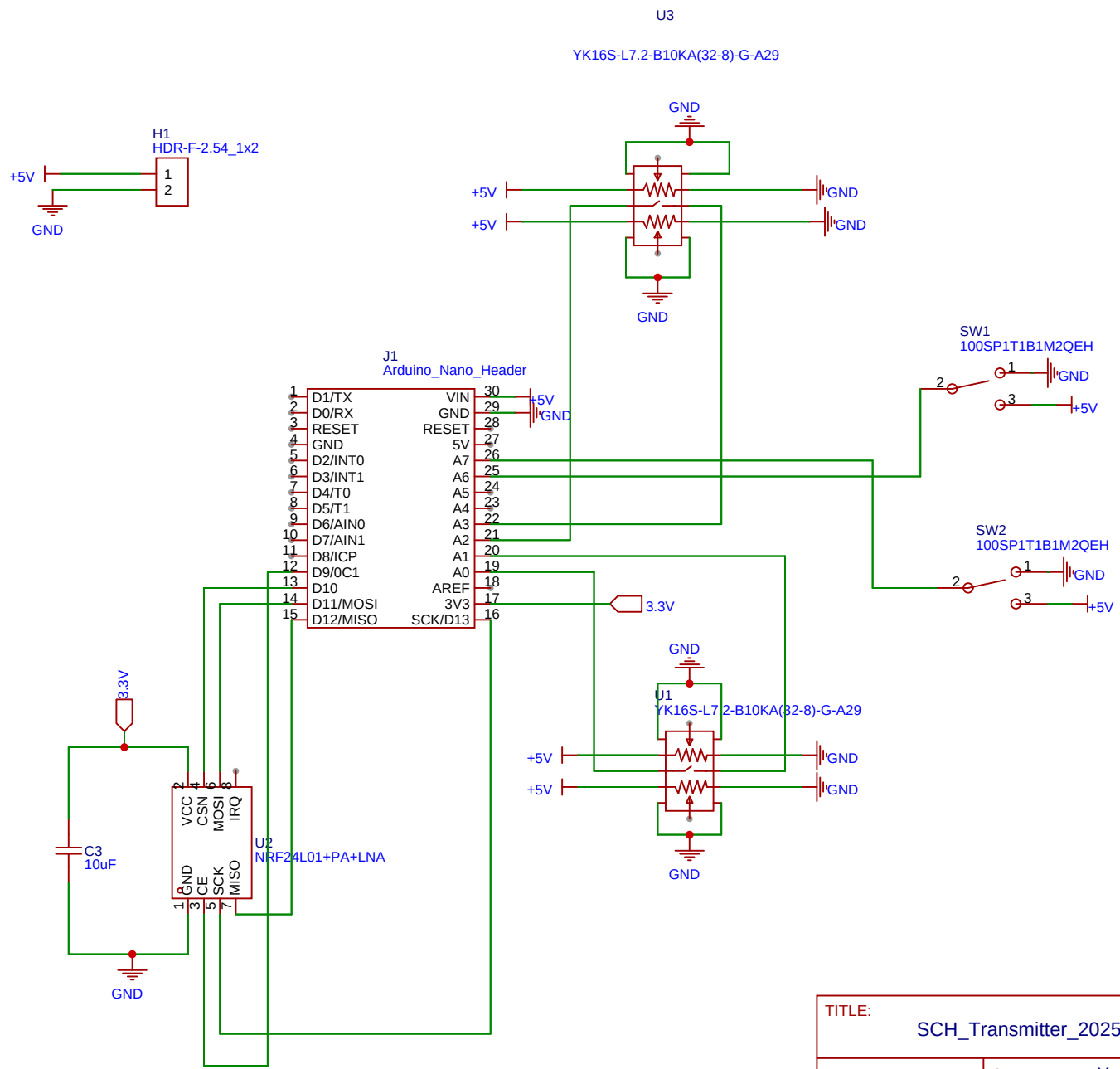

TITLE: SCH_Transmitter_2025-07-05 (1)		REV: 1.0
EasyEDA	Company: Your Company	Sheet: 1/1
	Date: 2025-07-05 Drawn By: adarshdg	