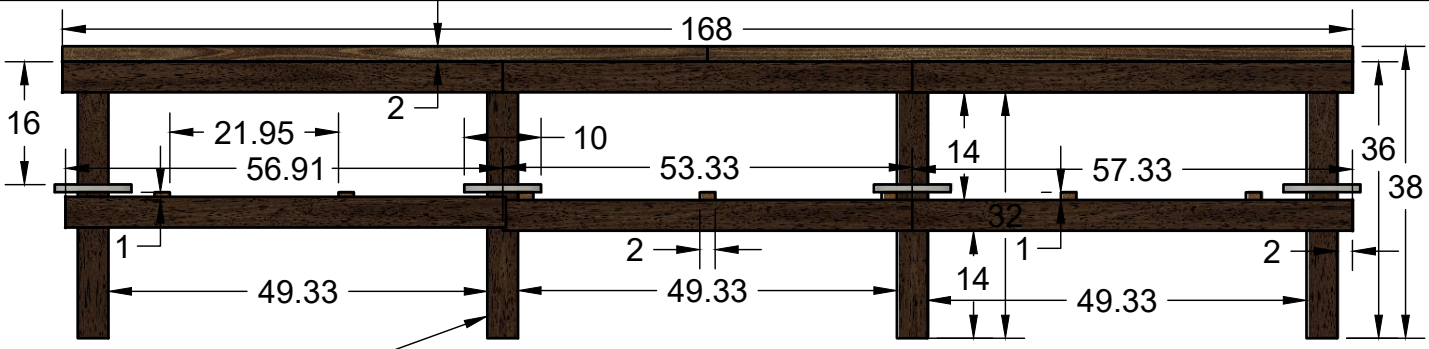

Front View

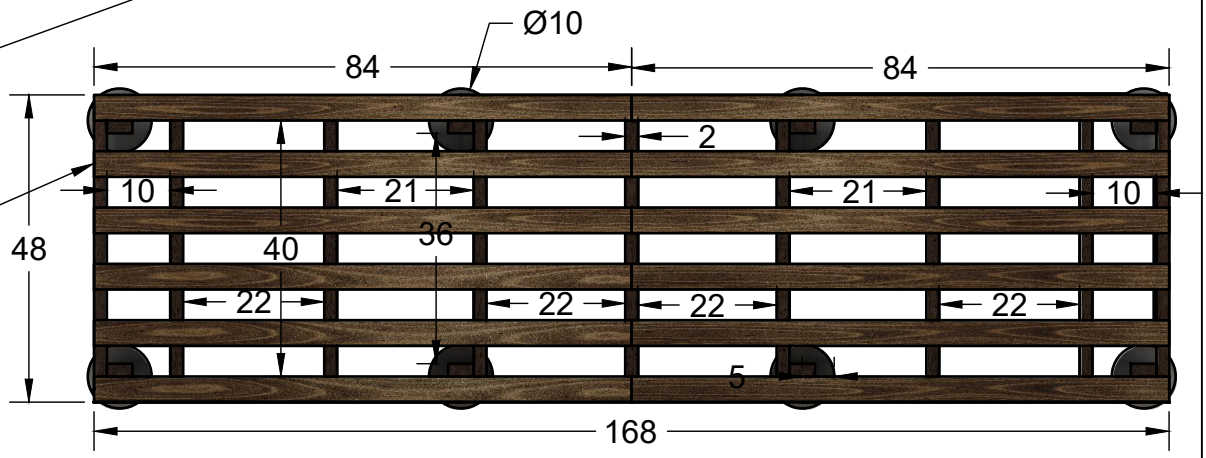

Top View

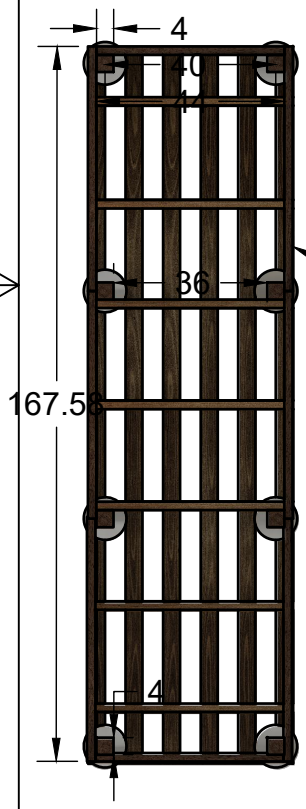

Bottom View

Angled View

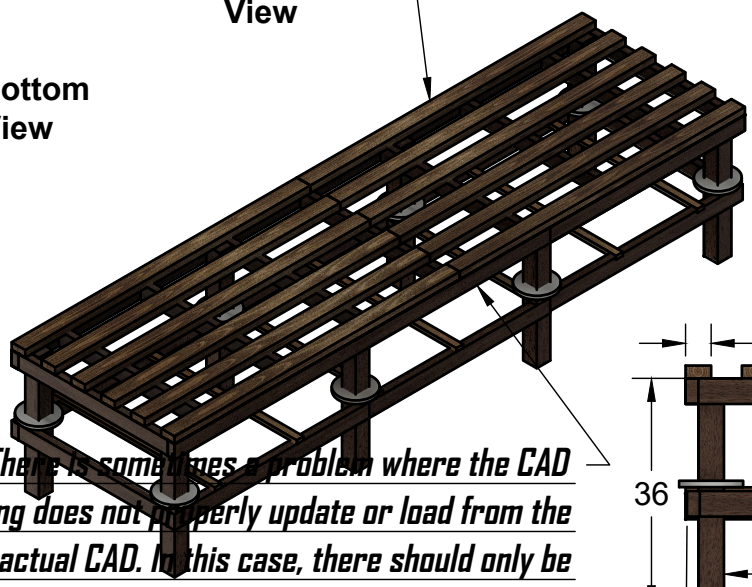

Side View

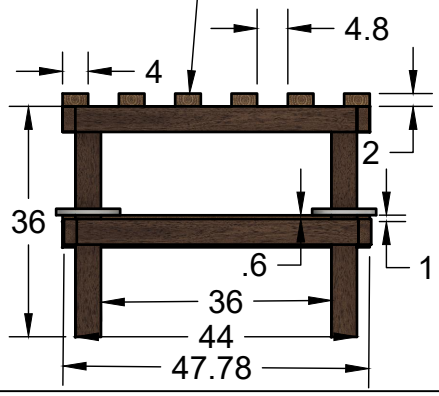

There is sometimes a problem where the CAD drawing does not properly update or load from the actual CAD. In this case, there should only be 2 lengthwise 2x4 (7' long) instead of 3 (4.67' long).

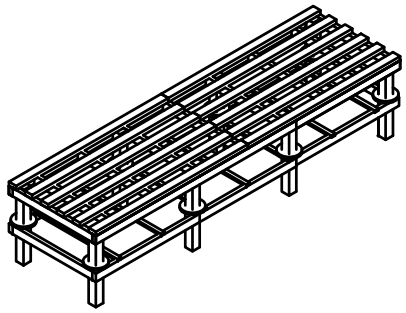

PROJECT

Adarsh Sheth's Eagle Project

TITLE

Little Greenhouse Bench 14'(length) x 4'(width) x 3'(height)

Beneficiary: Fertile Groundworks

APPROVED 6/23/2021	SIZE	CODE	DWG NO	REV
CHECKED 6/27/2021	A	Post-Proposal	Final Draft (after-proposal)	~v25
DRAWN Adarsh Sheth 6/2/2021	SCALE 1:30	WEIGHT Bench + ~150 lbs	SHEET 1/2	

Labelled digram of greenhouse bench parts (components)

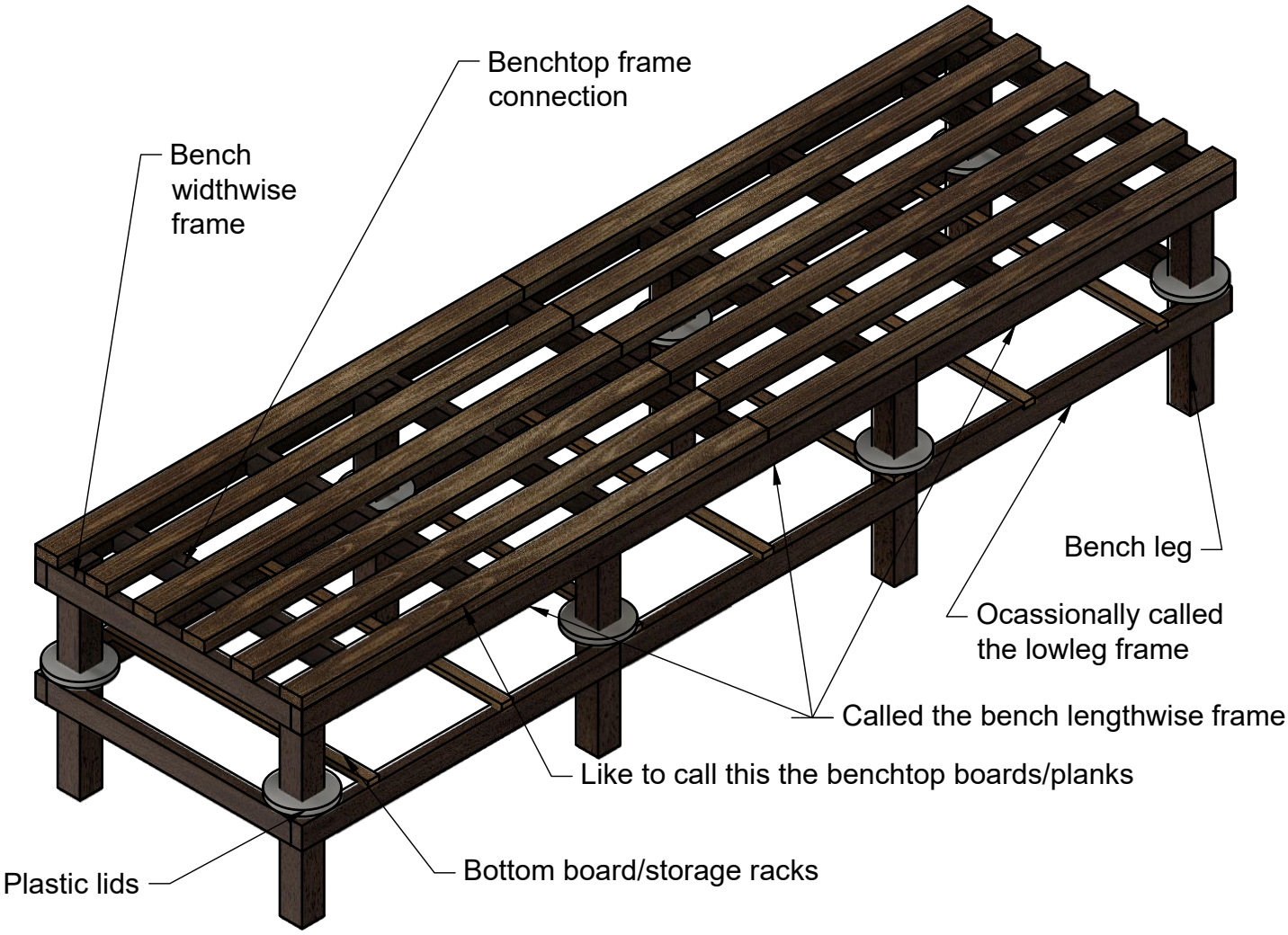

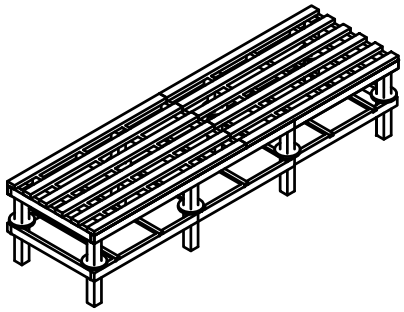

PROJECT

Adarsh Sheth's Eagle Project

TITLE

Little Greenhouse Bench
14'(length) x 4'(width) x 3'(height)

Beneficiary: Fertile Groundworks

APPROVED 6/23/21	SIZE	CODE	DWG NO	REV
CHECKED 6/27/21	A	Post-approval	Final Draft (after-proposal)	~v25
DRAWN Adarsh Sheth 6/2/2021	SCALE 1:22	WEIGHT Bench + ~150 lbs	SHEET 2/2	

Step 1: Top Frame

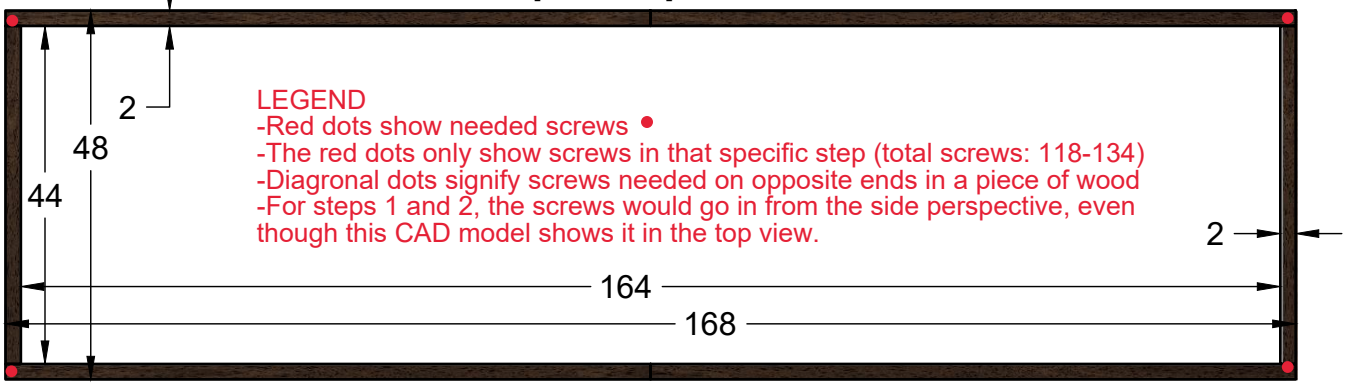

Step 2: Frame Connections

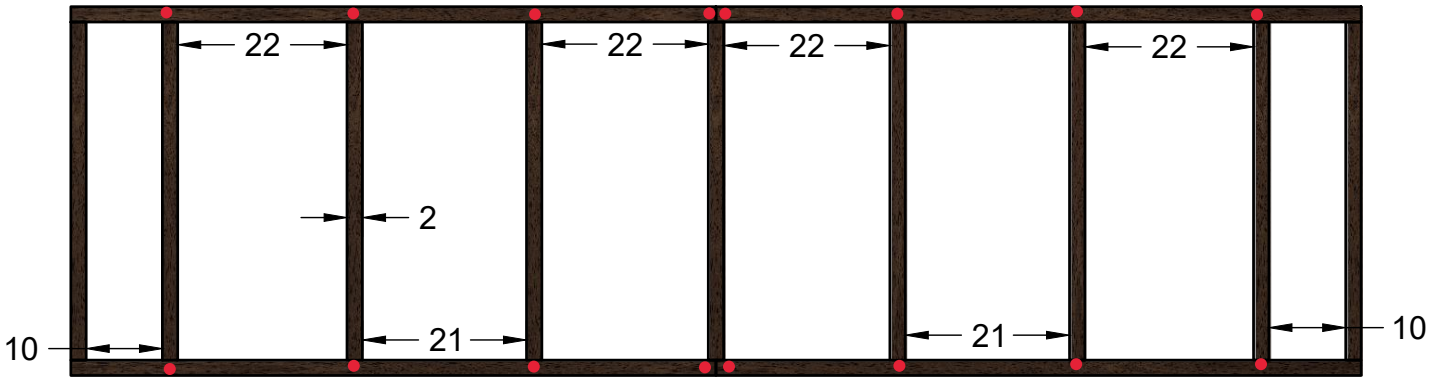

Step 3: Benchtop Boards

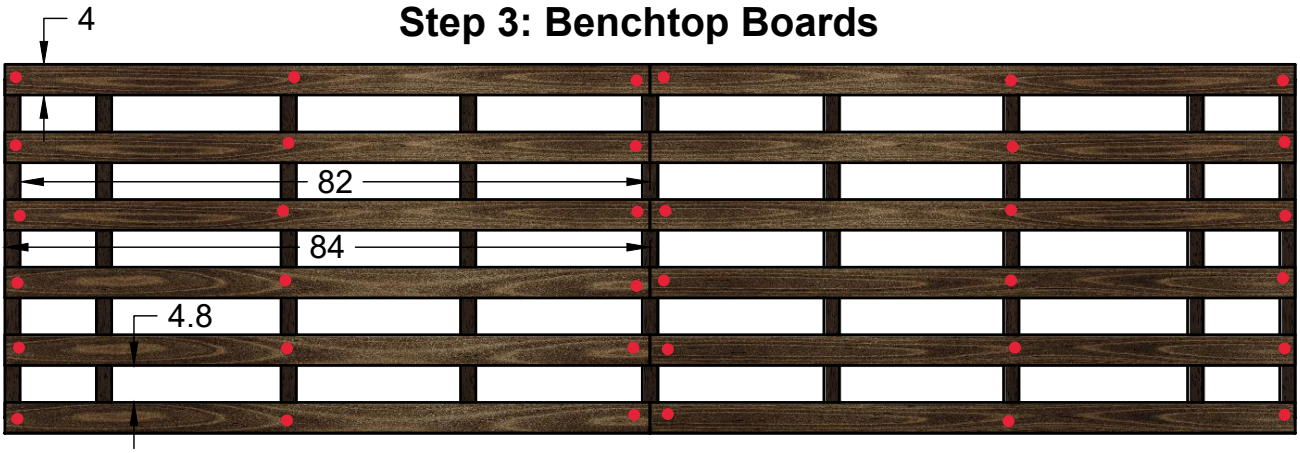

PROJECT	Greenhouse Bench Eagle Project			
TITLE	Step-by-Step Dimensions CAD Diagram			
APPROVED	SIZE A	CODE	DWG NO	REV
CHECKED				
DRAWN Adarsh Sheth 6/27/2021	SCALE 1:40	WEIGHT	SHEET 1/2	

Step 4: Legs

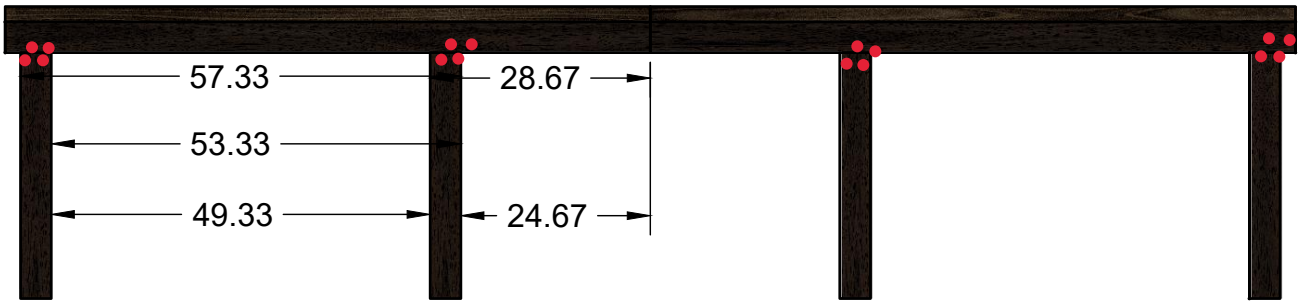

Step 5: Lowleg Frame

Step 6 & 7: Bottom Boards and Lids

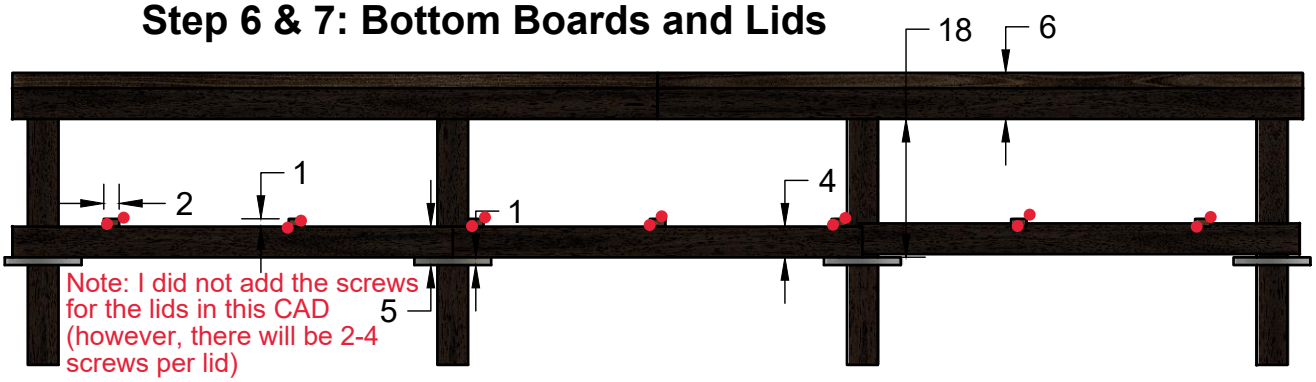

PROJECT

Greenhouse Bench Eagle Project

TITLE

Step-by-Step Dimensions CAD Diagram

APPROVED	SIZE	CODE	DWG NO	REV
CHECKED	A			
DRAWN Adarsh Sheth 6/27/2021	SCALE 1:25	WEIGHT	SHEET 2/2	