From Signal Vectors to the DFT Matrix

Imagine you have a discrete signal of length $N = 2^n$, stored as a column vector

$$\mathbf{x} = \begin{bmatrix} x_0 \\ x_1 \\ x_2 \\ \vdots \\ x_{N-1} \end{bmatrix}.$$

Remember that the k-th output signal is

$$y_k = \frac{1}{\sqrt{N}} \sum_{j=0}^{N-1} x_j \, \omega^{jk}.$$

Its **Discrete Fourier Transform** $\mathbf{y}$ is defined by the matrix-vector product

$$\mathbf{y} = F_N \, \mathbf{x},$$

where the DFT matrix F_N has entries

$$(F_N)_{jk} = \frac{1}{\sqrt{N}} \, \omega^{jk}, \qquad \omega = e^{-2\pi i/N}.$$

Explicitly,

For $N = 2, \omega = -1$:

$$F_2 = \frac{1}{\sqrt{2}} \begin{bmatrix} 1 & 1 \\ 1 & -1 \end{bmatrix} = H$$

The Hadamard gate is the 1-qubit QFT!

For $N = 4$ ($\omega = e^{-i\pi/2} = -i$),

$$F_4 = \frac{1}{2}\begin{bmatrix} 1 & 1 & 1 & 1 \\ 1 & -i & -1 & i \\ 1 & -1 & 1 & -1 \\ 1 & i & -1 & -i \end{bmatrix}.$$

If we choose a concrete signal, say $\mathbf{x} = [1,\ 0,\ 0,\ 0]^\top$ (a single impulse), the output is

$$\mathbf{y} = F_4\mathbf{x} = \frac{1}{2}[1,\ 1,\ 1,\ 1]^\top,$$

i.e., every frequency component gets equal amplitude.

For $N = 2^n$, the DFT matrix is:

$$F_N = \frac{1}{\sqrt{N}}\begin{bmatrix} 1 & 1 & 1 & 1 & \cdots & 1 \\ 1 & \omega & \omega^2 & \omega^3 & \cdots & \omega^{N-1} \\ 1 & \omega^2 & \omega^4 & \omega^6 & \cdots & \omega^{2(N-1)} \\ 1 & \omega^3 & \omega^6 & \omega^9 & \cdots & \omega^{3(N-1)} \\ \vdots & \vdots & \vdots & \vdots & \ddots & \vdots \\ 1 & \omega^{N-1} & \omega^{2(N-1)} & \omega^{3(N-1)} & \cdots & \omega^{(N-1)(N-1)} \end{bmatrix},$$

$$F_{jk} = \frac{1}{\sqrt{N}}\,\omega^{jk}, \quad \text{where } \omega = e^{-2\pi i/N}$$

Notice that F_N is **unitary** ($F_N^\dagger F_N = I$).

From Classical Vector to Quantum State Vector

In quantum computing we work with **amplitude vectors** of normalised states.
Consider an n-qubit state

$$|\psi\rangle = \sum_{j=0}^{N-1} x_j\,|j\rangle, \qquad \sum_{j=0}^{N-1} |x_j|^2 = 1.$$

The vector of amplitudes $\mathbf{x} = [x_0, \ldots, x_{N-1}]^\top$ is exactly the kind of object the DFT acts on.
The **Quantum Fourier Transform** (QFT) is defined as the unitary operation whose matrix in the

computational basis is the DFT matrix:

$$\mathrm{QFT}: \ |j\rangle \ \longmapsto \ \frac{1}{\sqrt{N}} \sum_{k=0}^{N-1} e^{2\pi i\, jk/N} \, |k\rangle.$$

Thus, if we apply QFT to the state $|\psi\rangle$, the new amplitude vector $\mathbf{y}$ is

$$\mathbf{y} = F_N \, \mathbf{x},$$

exactly the same matrix-vector multiplication we started with.

(Note: The sign convention in quantum literature often uses $+$ in the exponent, but this is just a convention – the inverse QFT uses the minus sign.)

Quantum Circuit from the Product Representation

For $N = 2^n$, we can write the index j in binary as $j = j_1 j_2 \ldots j_n$ (most significant bit first).

$$\mathrm{QFT}: \quad |j\rangle \ \longrightarrow \ \frac{1}{\sqrt{N}} \sum_{k=0}^{N-1} e^{2\pi i\, jk/N} |k\rangle$$

We can write as a tensor product:

$$\mathrm{QFT}|j_1 j_2 \ldots j_n\rangle = \frac{1}{\sqrt{2^n}} \Big(|0\rangle + e^{2\pi i\, 0.j_n}|1\rangle\Big) \otimes \Big(|0\rangle + e^{2\pi i\, 0.j_{n-1}j_n}|1\rangle\Big) \otimes \cdots \otimes \Big(|0\rangle + e^{2\pi i\, 0.j_1 j_2 \cdots}$$

where $0.j_l j_{l+1} \ldots j_n = \frac{j_l}{2} + \frac{j_{l+1}}{4} + \cdots + \frac{j_n}{2^{n-l+1}}$ is a binary fraction.

More concisely,

$$\mathrm{QFT}|j\rangle = \frac{1}{\sqrt{2^n}} \bigotimes_{l=1}^{n} \Big(|0\rangle + e^{2\pi i j/2^l}|1\rangle\Big)$$

Interpretation:

- The first qubit in the tensor product (originally the most significant bit j_1) acquires a

phase that depends on **all** bits to its right.

- The last qubit (least significant bit j_n) gets a phase that depends only on itself.

This factorised form directly yields the circuit.

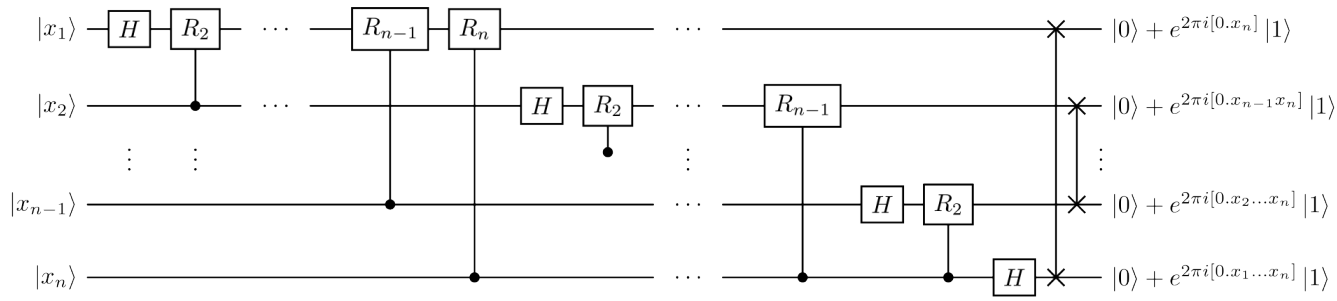

The circuit implements the product representation using two elementary gates:

$$H = \frac{1}{\sqrt{2}}\begin{pmatrix}1 & 1\\ 1 & -1\end{pmatrix}, \qquad R_k = \begin{pmatrix}1 & 0\\ 0 & e^{2\pi i/2^k}\end{pmatrix}.$$

Step-by-step for n qubits:

1. Apply a Hadamard gate H to qubit 1 (the top line, holding j_1).
2. Apply controlled-R_k gates, where qubit l (with $l > 1$) controls a rotation on qubit 1 by angle $2\pi/2^l$.
3. Move to qubit 2: apply H, then controlled rotations from qubits $3, 4, \ldots, n$.
4. Continue until all qubits are processed.
5. Finally, reverse the order of the qubits (swap gates) to match the standard big-endian output.

Complexity: Why It Matters

- **Classical FFT**: $O(N \log N) = O(n2^n)$ operations.
- **QFT circuit**: $O(n^2)$ gates – an **exponential reduction** in the number of steps.

The QFT is the heart of Shor's algorithm and quantum phase estimation, precisely because it turns the heavy matrix-vector multiplication $F_N\mathbf{x}$ into a shallow circuit of H and controlled phase gates.

Periodicity and the DFT

The DFT excels at answering: *What frequencies are present in a signal?*
Equivalently: *What is the period of a repeating pattern?*

Consider a discrete signal $x_0, x_1, \ldots, x_{N-1}$ that is **exactly periodic** with period r, and assume that the signal length N is an integer multiple of r. Then for all j:

$$x_{j+r} = x_j.$$

The DFT of such a signal is defined as

$$X_k = \sum_{n=0}^{N-1} x_n \, e^{-2\pi i \, kn/N}, \qquad k = 0, 1, \ldots, N-1.$$

Because the signal repeats every r samples, the DFT sum can be broken into $m = N/r$ identical blocks of length r. Let $y_0, y_1, \ldots, y_{r-1}$ denote one period of the signal. Then for any bin index k we have

$$X_k = \left(\sum_{j=0}^{r-1} y_j \, e^{-2\pi i \, kj/N} \right) \left(1 + e^{-2\pi i \, kr/N} + e^{-4\pi i \, kr/N} + \cdots + e^{-2\pi i \, k(m-1)r/N} \right).$$

The second factor is a geometric series with ratio $e^{-2\pi i \, kr/N}$. It sums to **zero** unless the ratio equals 1, i.e. unless

$$e^{-2\pi i \, kr/N} = 1 \quad \Longleftrightarrow \quad \frac{kr}{N} \in \mathbb{Z}.$$

Since N is an integer multiple of r, this condition is equivalent to k being a multiple of $\frac{N}{r}$.
Therefore, **non-zero DFT magnitude appears only at bin indices**

$$k = 0, \ \frac{N}{r}, \ 2\frac{N}{r}, \ \ldots, \ (r-1)\frac{N}{r}.$$

Example: Let $N = 16$ and $r = 4$. We define one period of the signal as the pattern $[1, 0, 0, 0]$, and we shift the starting point by an offset $x_0 = 2$. The resulting 16-sample signal is:

$$
\begin{aligned}
x &= [\underbrace{0,0}_{\text{shift}}, \underbrace{1,0,0,0}_{\text{period 1}}, \underbrace{1,0,0,0}_{\text{period 2}}, \underbrace{1,0,0,0}_{\text{period 3}}, \underbrace{1,0,0,0}_{\text{period 4}}] \\
&= [0,0,1,0,0,0,1,0,0,0,1,0,0,0,1,0].
\end{aligned}
$$

(Indices: $x_0 = 0$, $x_1 = 0$, $x_2 = 1$, $x_3 = 0$, $x_4 = 0$, $x_5 = 0$, $x_6 = 1$, ..., $x_{15} = 0$.)

The DFT of this sequence has non-zero magnitude **only** at bin indices $k = 0, 4, 8, 12$, because $\frac{N}{r} = 4$. Let us compute the $k = 4$ bin explicitly to see the exponential factors at work:

$$
\begin{aligned}
X_4 &= \sum_{n=0}^{15} x_n \, e^{-2\pi i \, 4n/16} = \sum_{n=0}^{15} x_n \, e^{-\pi i \, n/2} \\
&= x_0 e^0 + x_1 e^{-i\pi/2} + x_2 e^{-i\pi} + x_3 e^{-i3\pi/2} + \cdots + x_{15} e^{-i15\pi/2}.
\end{aligned}
$$

Only the non-zero samples $x_2 = 1$, $x_6 = 1$, $x_{10} = 1$, $x_{14} = 1$ contribute. Their exponential factors are:

- $n = 2: \; e^{-i\pi} = -1$
- $n = 6: \; e^{-i3\pi} = -1$
- $n = 10: \; e^{-i5\pi} = -1$
- $n = 14: \; e^{-i7\pi} = -1$

Thus $X_4 = -4$. Similarly, the other non-zero DFT coefficients are X_0, X_8, X_{12}.

In terms of **normalized frequency** $f = k/N$ (cycles per sample), the peaks occur at

$$
f = 0, \; \frac{4}{16} = 0.25, \; \frac{8}{16} = 0.5, \; \frac{12}{16} = 0.75.
$$

The **spacing between consecutive peaks** is:

- **In bin index:** $\Delta k = \dfrac{N}{r} = 4.$
- **In frequency:** $\Delta f = \dfrac{1}{r} = 0.25.$

Thus, by measuring the distance between bright DFT bins, we can directly extract the period $r = \dfrac{N}{\Delta k} = \dfrac{1}{\Delta f} = 4.$

> **Note:** When r does **not** divide N, the signal is not perfectly periodic on the analysis window (it is truncated), and the DFT exhibits spectral leakage. The peaks are no longer perfectly

> isolated, but their spacing still *approximately* equals N/r. In the quantum case, however, periodicity is defined modulo N on a cyclic group, which avoids truncation artifacts entirely.

Classical example: a sequence of 1s and 0s repeating every 4 samples.

```python
# Classical period finding with DFT (corrected)
import numpy as np
import matplotlib.pyplot as plt

N = 16          # signal length
r = 2           # period (does NOT need to divide N)
x0 = 0          # offset

# Build the periodic comb: 1 at indices x0 + m*r (mod N)
x = np.zeros(N)
g = np.gcd(N, r)                # gcd(N, r)
M = N // g                      # number of distinct elements in the subgroup
for m in range(M):
    idx = (x0 + m * r) % N
    x[idx] = 1.0

# Normalize like a quantum state
x = x / np.linalg.norm(x)

# Compute DFT (unitary normalization: divide by sqrt(N) manually)
X = np.fft.fft(x) / np.sqrt(N)   # now matches quantum QFT convention
freq = np.fft.fftfreq(N)         # frequencies in cycles/sample

# Plot
plt.figure(figsize=(10, 3))
plt.subplot(1, 2, 1)
plt.stem(range(N), np.abs(x)**2)   # show probabilities
plt.title(f'Periodic state (r = {r}, offset = {x0})')
plt.xlabel('Index j')
plt.ylabel('Probability |x[j]|²')
plt.xticks(range(0, N, r))

plt.subplot(1, 2, 2)
plt.stem(freq, np.abs(X)**2)       # show probabilities after QFT
plt.title('DFT magnitude squared (quantum probability)')
plt.xlabel('Frequency (cycles/sample)')
plt.ylabel('|X[k]|²')

# Draw vertical lines at expected peak frequencies
```

```python
# Peaks occur at multiples of g/N (both positive and negative)
peak_freqs = np.arange(0, N, N//g) * (1/N)   # in cycles/sample
for f in peak_freqs:
    plt.axvline(f, color='red', linestyle='--', alpha=0.5)
    plt.axvline(f - 1, color='red', linestyle='--', alpha=0.5)  # wrap negative freqs

plt.tight_layout()
plt.show()

# Analysis output
print("=" * 50)
print("DFT PERIOD FINDING ANALYSIS")
print(f"N = {N}, r = {r}, x0 = {x0}")
print(f"gcd(N, r) = {g}")
print(f"Number of distinct states M = N / gcd(N,r) = {M}")
print(f"Expected DFT peak bins (multiples of N/g = {N//g}): {np.arange(0, N, N//g)}")
print(f"Expected peak frequencies (cycles/sample): {np.arange(0, N, N//g) * (1/N)}")
non_zero_bins = np.where(np.abs(X) > 1e-10)[0]
print(f"Actual non-zero bins: {non_zero_bins}")
print(f"Actual non-zero frequencies: {freq[non_zero_bins]}")
print(f"DFT probabilities at those bins: {np.abs(X[non_zero_bins])**2}")
print()
print(f"Bin spacing Δk = N / gcd(N,r) = {N//g}")
print(f"Frequency spacing Δf = gcd(N,r) / N = {g/N:.3f} cycles/sample")
print("=" * 50)
```

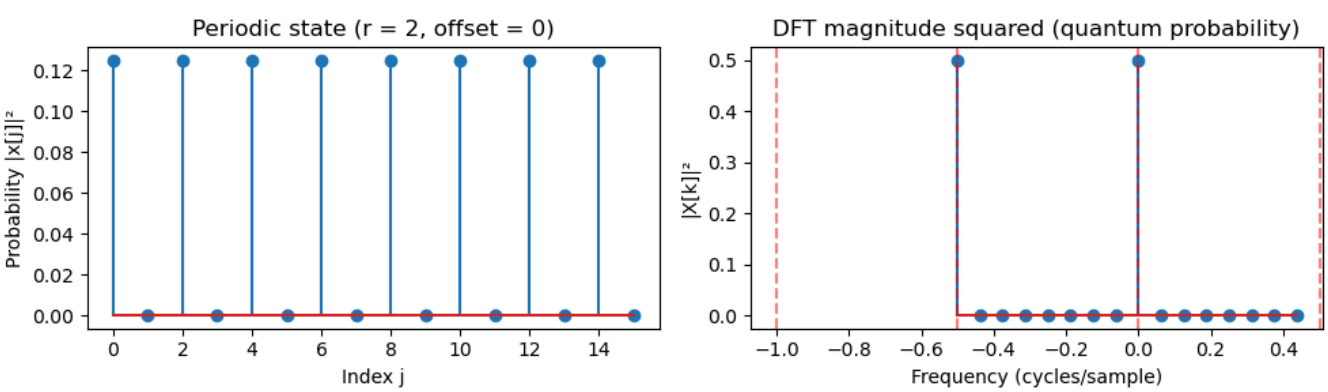

```
====================================================
DFT PERIOD FINDING ANALYSIS
N = 16, r = 2, x0 = 0
gcd(N, r) = 2
Number of distinct states M = N / gcd(N,r) = 8
Expected DFT peak bins (multiples of N/g = 8): [0 8]
Expected peak frequencies (cycles/sample): [0.  0.5]
Actual non-zero bins: [0 8]
Actual non-zero frequencies: [ 0.  -0.5]
DFT probabilities at those bins: [0.5 0.5]

Bin spacing Δk = N / gcd(N,r) = 8
Frequency spacing Δf = gcd(N,r) / N = 0.125 cycles/sample
====================================================
```

```python
# Classical period finding with DFT (quantum-style bin indices)
import numpy as np
import matplotlib.pyplot as plt

N = 16          # signal length
r = 2           # period (does NOT need to divide N)
x0 = 0          # offset

# Build the periodic comb: 1 at indices x0 + m*r (mod N)
x = np.zeros(N)
g = np.gcd(N, r)                # gcd(N, r)
M = N // g                      # number of distinct elements in the subgroup
for m in range(M):
    idx = (x0 + m * r) % N
    x[idx] = 1.0

# Normalize like a quantum state
x = x / np.linalg.norm(x)

# Compute DFT (unitary normalization: divide by sqrt(N) manually)
X = np.fft.fft(x) / np.sqrt(N)   # now matches quantum QFT convention

# Plot using bin indices (not frequencies)
plt.figure(figsize=(10, 3))
plt.subplot(1, 2, 1)
plt.stem(range(N), np.abs(x)**2)
plt.title(f'Periodic state (r = {r}, offset = {x0})')
plt.xlabel('Index j')
plt.ylabel('Probability |x[j]|²')
plt.xticks(range(0, N, r))

plt.subplot(1, 2, 2)
plt.stem(range(N), np.abs(X)**2)
plt.title('DFT magnitude squared (quantum probability)')
plt.xlabel('Basis state |k⟩')
plt.ylabel('|X[k]|²')

# Draw vertical lines at expected peak bin indices
peak_bins = np.arange(0, N, N // g)   # multiples of N/g
```

```python
for k in peak_bins:
    plt.axvline(k, color='red', linestyle='--', alpha=0.5)

plt.tight_layout()
plt.show()

# Analysis output
print("=" * 50)
print("DFT PERIOD FINDING ANALYSIS (quantum convention)")
print(f"N = {N}, r = {r}, x0 = {x0}")
print(f"gcd(N, r) = {g}")
print(f"Number of distinct states M = N / gcd(N,r) = {M}")
print(f"Expected DFT peak bins (multiples of N/g = {N//g}): {peak_bins}")
non_zero_bins = np.where(np.abs(X) > 1e-10)[0]
print(f"Actual non-zero bins: {non_zero_bins}")
print(f"DFT probabilities at those bins: {np.abs(X[non_zero_bins])**2}")
print()
print(f"Bin spacing Δk = N / gcd(N,r) = {N//g}")
print("=" * 50)
```

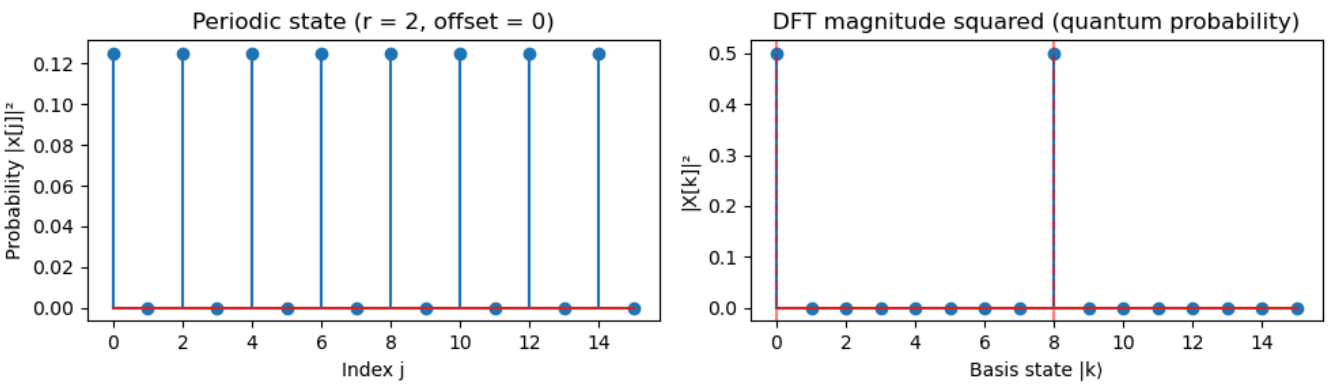

```
====================================================
DFT PERIOD FINDING ANALYSIS (quantum convention)
N = 16, r = 2, x0 = 0
gcd(N, r) = 2
Number of distinct states M = N / gcd(N,r) = 8
Expected DFT peak bins (multiples of N/g = 8): [0 8]
Actual non-zero bins: [0 8]
DFT probabilities at those bins: [0.5 0.5]

Bin spacing Δk = N / gcd(N,r) = 8
====================================================
```

Why This Matters for Quantum Period Finding

The **Quantum Fourier Transform (QFT)** performs exactly the same linear transformation as the DFT, but on a quantum superposition.

- If we encode a periodic signal into the amplitudes of a quantum state `|ψ⟩ = ∑_j x_j |j⟩`, the QFT maps it to `∑_k X_k |k⟩`.
- The probability of measuring basis state `|k⟩` is proportional to `|X_k|²`.
- As in the classical case, the probability mass concentrates on those `|k⟩` whose indices are multiples of `N/r`.

Thus, by preparing a periodic quantum state and applying the QFT, we can **measure the period** `r` from the spacing of the bright computational basis states. This is the core principle behind Shor's factoring algorithm and many other quantum algorithms that rely on period finding.

Quantum Period Finding – The Heart of Shor's Algorithm

In quantum period finding we are given a unitary U that implements a periodic function:

$$f(x) = f(x + r) \quad \text{with unknown period } r.$$

We prepare the superposition $\frac{1}{\sqrt{N}} \sum_x |x\rangle |f(x)\rangle$, measure the second register, and obtain a state proportional to:

$$\sum_{m=0}^{M-1} |x_0 + mr\rangle$$

where x_0 is the measured value and $M \approx N/r$.

Applying the **QFT** to the first register maps this periodic comb to a state whose amplitudes are sharply peaked near multiples of N/r.

- In the general case where r does not divide N, the peaks are exactly at multiples of $N/\gcd(N, r)$

Fourier Analysis of a Periodic Additive State on $\mathbb{Z}$_N

We prepare an **n**-qubit state (Hilbert space dimension `N = 2ⁿ`) that is a uniform superposition over equally spaced basis states modulo `N`:

$$|\psi\rangle = \frac{1}{\sqrt{M}} \sum_{m=0}^{M-1} |x_0 + m \cdot r \bmod N\rangle$$

where `r` is the step size and `x₀` is an arbitrary offset.
Because the sequence repeats after `M` steps, the number of distinct basis states is

$$M = \frac{N}{\gcd(N, r)}.$$

Applying the Quantum Fourier Transform (QFT) to this state yields a new state whose probability distribution is concentrated on basis states `|k⟩` where the phase factor $e^{2\pi i k r/N}$ equals `1`. This condition is

$$\frac{kr}{N} \in \mathbb{Z} \quad \Longleftrightarrow \quad k \cdot r \equiv 0 \pmod{N}.$$

Let $g = gcd(N, r)$. Dividing the congruence by g gives

$$k \cdot \frac{r}{g} \equiv 0 \pmod{\frac{N}{g}}.$$

Since r/g and N/g are coprime, we must have

$$k \equiv 0 \pmod{\frac{N}{g}}.$$

Thus the QFT produces **non-zero amplitudes only at multiples of**

$$\Delta = \frac{N}{g} = \frac{N}{\gcd(N, r)}.$$

The number of such peaks in the interval `[0, N-1]` is exactly $g = gcd(N, r)$.
(Each peak appears with equal probability when the amplitudes interfere constructively, though the exact distribution of probability among these peaks depends on the offset `x₀`.)

Important Observations

1. **The spacing is *not* `N/r` in general.**
   It equals `N/r` **only when** `r` divides `N`. In all other cases the spacing is larger, determined by the greatest common divisor.
2. **Increasing `N` (adding qubits) while keeping `r` fixed increases the spacing `Δ`** because `Δ = N / g` grows with `N`, while the number of peaks `g` stays constant.
   For example, with `r = 4`:
   - `N = 16` → peaks at 0, 4, 8, 12 (spacing 4).
   - `N = 32` → peaks at 0, 8, 16, 24 (spacing 8).
3. **The QFT reveals the *subgroup structure* of the additive comb.**
   The peak positions correspond to the quotient group `ℤ_N / ⟨r⟩`, whose size is `gcd(N,r)`.
4. **Relation to Shor's algorithm:**
   In Shor's period-finding routine, the periodic function is **not** a simple additive step modulo the Hilbert space dimension. Instead, a modular exponentiation function is used, and the QFT is applied to a register of size `Q ≫ r²`. The resulting peak spacing is approximately `Q/r`, and `r` is recovered via continued fractions. The toy model discussed here is an instructive but distinct demonstration of the QFT on a finite cyclic group.

```python
import ipywidgets as widgets
import numpy as np
import matplotlib.pyplot as plt
import pennylane as qml

# ---------- Helper for binary formatting ----------
def to_binary_string(value, n_bits):
    """Return binary string of `value` padded to `n_bits`."""
    return format(value, f'0{n_bits}b')

def print_state_binary(state_vector, n_qubits, top_n=10, label="State"):
    """Print the amplitudes and binary representation of non-zero basis states."""
    N = len(state_vector)
    nonzero = np.abs(state_vector) > 1e-10
    indices = np.where(nonzero)[0]
    print(f"{label} — non-zero basis states (total {len(indices)}):")
    for i in indices[:top_n]:
        amp = state_vector[i]
        prob = np.abs(amp)**2
        print(f"  |{to_binary_string(i, n_qubits)}⟩ (dec {i:3d}) : amp = {amp.real:.3f}{an
    if len(indices) > top_n:
        print(f"  ... and {len(indices)-top_n} more")

# ---------- Periodic State Preparation ----------
def periodic_state(r, n_qubits, x0=0):
    """
    Create state: uniform superposition of |x0 + m·r mod N⟩ for m = 0..M-1.
    Returns state vector and the offset x0 (reduced modulo r for display).
    """
    N = 2**n_qubits
    x0 = x0 % r   # for display purposes only; actual offset is x0 modulo N
    state = np.zeros(N, dtype=complex)
    m = 0
    while True:
        idx = (x0 + m * r) % N
        if state[idx] != 0:      # we've looped back
            break
        state[idx] = 1.0
        m += 1
```

```
    state /= np.linalg.norm(state)
    return state, x0

# ---------- QFT Circuit ----------
def qft_circuit(wires):
    """QFT with big-endian output (standard binary order)."""
    n = len(wires)
    for i in range(n):
        qml.Hadamard(wires=wires[i])
        for j in range(i + 1, n):
            angle = np.pi / (2 ** (j - i))
            qml.ControlledPhaseShift(angle, wires=[wires[j], wires[i]])
    # Reverse qubit order so output is in usual binary ordering
    for i in range(n // 2):
        qml.SWAP(wires=[wires[i], wires[n - i - 1]])

# ---------- Main Demo ----------
def qft_period_demo(r=3, n_qubits=4, x0=0):
    N = 2**n_qubits
    target_state, x0_used = periodic_state(r, n_qubits, x0)

    print("\n" + "="*60)
    print(f"Parameters: r = {r}, n_qubits = {n_qubits}, N = {N}, offset x0 = {x0_used} (mo
    print_state_binary(target_state, n_qubits, label="Input state")

    dev = qml.device('default.qubit', wires=n_qubits)

    @qml.qnode(dev)
    def apply_qft(state_vec):
        qml.StatePrep(state_vec, wires=range(n_qubits))
        qft_circuit(wires=range(n_qubits))
        return qml.probs(wires=range(n_qubits))

    probs = apply_qft(target_state)

    # To show actual QFT amplitudes (not just probabilities), we run again to get state ve
    @qml.qnode(dev)
    def get_qft_state(state_vec):
        qml.StatePrep(state_vec, wires=range(n_qubits))
```

```
        qft_circuit(wires=range(n_qubits))
        return qml.state()

    qft_state = get_qft_state(target_state)

    # Plot
    fig, (ax1, ax2) = plt.subplots(1, 2, figsize=(12, 4))
    ax1.stem(range(N), np.abs(target_state)**2)
    ax1.set_title(f'Input state (r={r}, x0={x0_used})')
    ax1.set_xlabel('Basis state |x⟩')
    ax1.set_ylabel('Probability')

    ax2.stem(range(N), probs)
    ax2.set_title('After QFT')
    ax2.set_xlabel('Basis state |k⟩')
    ax2.set_ylabel('Probability')
    ax2.set_xticks(range(0, N, max(1, N//8)))
    plt.tight_layout()
    plt.show()

    # Analysis of QFT output
    top_indices = np.argsort(probs)[-5:][::-1]
    top_probs = probs[top_indices]

    g = np.gcd(N, r)
    spacing = N // g
    num_peaks = g

    print("\nQFT output analysis:")
    print(f"  gcd(N, r) = {g}")
    print(f"  Expected peak spacing = N / gcd(N,r) = {spacing}")
    print(f"  Number of peaks = gcd(N,r) = {num_peaks}")
    print(f"  Top 5 measured |k⟩ (by probability):")
    for k, p in zip(top_indices, top_probs):
        print(f"    |{to_binary_string(k, n_qubits)}⟩ (dec {k:3d}) : prob = {p:.4f}")

    if N % r != 0:
        print("\n  ⚠  r does not divide N, so the QFT reveals the subgroup spacing (gcd(N
        print("     This is expected — the Fourier transform shows the subgroup structure
```

```
    print_state_binary(qft_state, n_qubits, label="QFT output state vector")
qft_period_demo(r=6, n_qubits=4, x0=2)
```

```
==============================================================
Parameters: r = 6, n_qubits = 4, N = 16, offset x0 = 2 (mod r)
Input state – non-zero basis states (total 8):
  |0000⟩ (dec   0) : amp = 0.354+0.000j, prob = 0.125
  |0010⟩ (dec   2) : amp = 0.354+0.000j, prob = 0.125
  |0100⟩ (dec   4) : amp = 0.354+0.000j, prob = 0.125
  |0110⟩ (dec   6) : amp = 0.354+0.000j, prob = 0.125
  |1000⟩ (dec   8) : amp = 0.354+0.000j, prob = 0.125
  |1010⟩ (dec  10) : amp = 0.354+0.000j, prob = 0.125
  |1100⟩ (dec  12) : amp = 0.354+0.000j, prob = 0.125
  |1110⟩ (dec  14) : amp = 0.354+0.000j, prob = 0.125
```

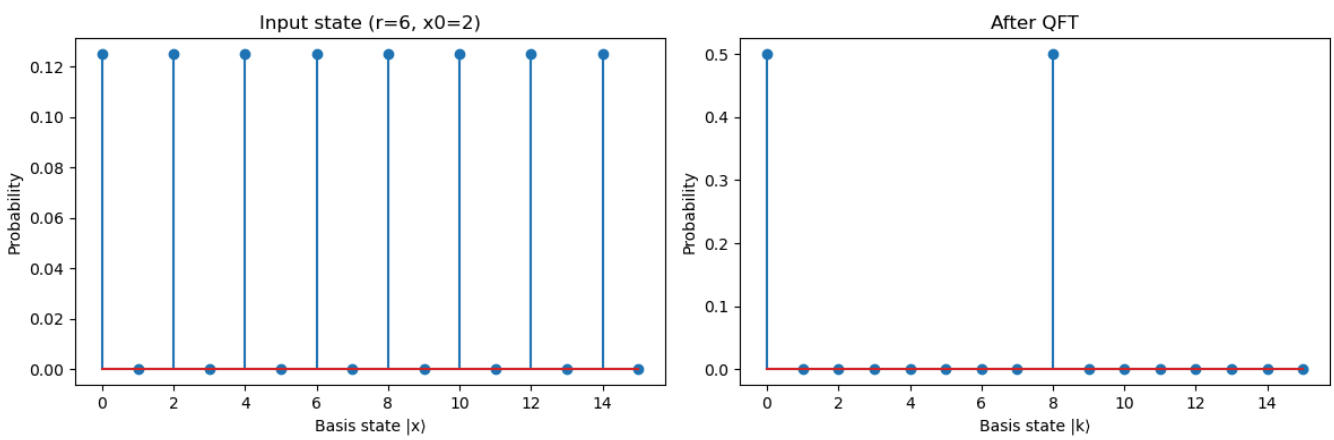

```
QFT output analysis:
  gcd(N, r) = 2
  Expected peak spacing = N / gcd(N,r) = 8
  Number of peaks = gcd(N,r) = 2
  Top 5 measured |k⟩ (by probability):
    |1000⟩ (dec   8) : prob = 0.5000
    |0000⟩ (dec   0) : prob = 0.5000
    |1101⟩ (dec  13) : prob = 0.0000
    |1111⟩ (dec  15) : prob = 0.0000
    |1100⟩ (dec  12) : prob = 0.0000

  ⚠  r does not divide N, so the QFT reveals the subgroup spacing (gcd(N,r) 
     This is expected – the Fourier transform shows the subgroup structure.
QFT output state vector – non-zero basis states (total 2):
  |0000⟩ (dec   0) : amp = 0.707+0.000j, prob = 0.500
  |1000⟩ (dec   8) : amp = 0.707+0.000j, prob = 0.500
```

```
# ---------- Interactive Widget ----------
widgets.interact(qft_period_demo,
                 r=widgets.IntSlider(min=2, max=15, step=1, value=3, description='Period 
                 n_qubits=widgets.IntSlider(min=3, max=8, step=1, value=4, description='Qu
                 x0=widgets.IntSlider(min=0, max=15, step=1, value=0, description='Offset
```