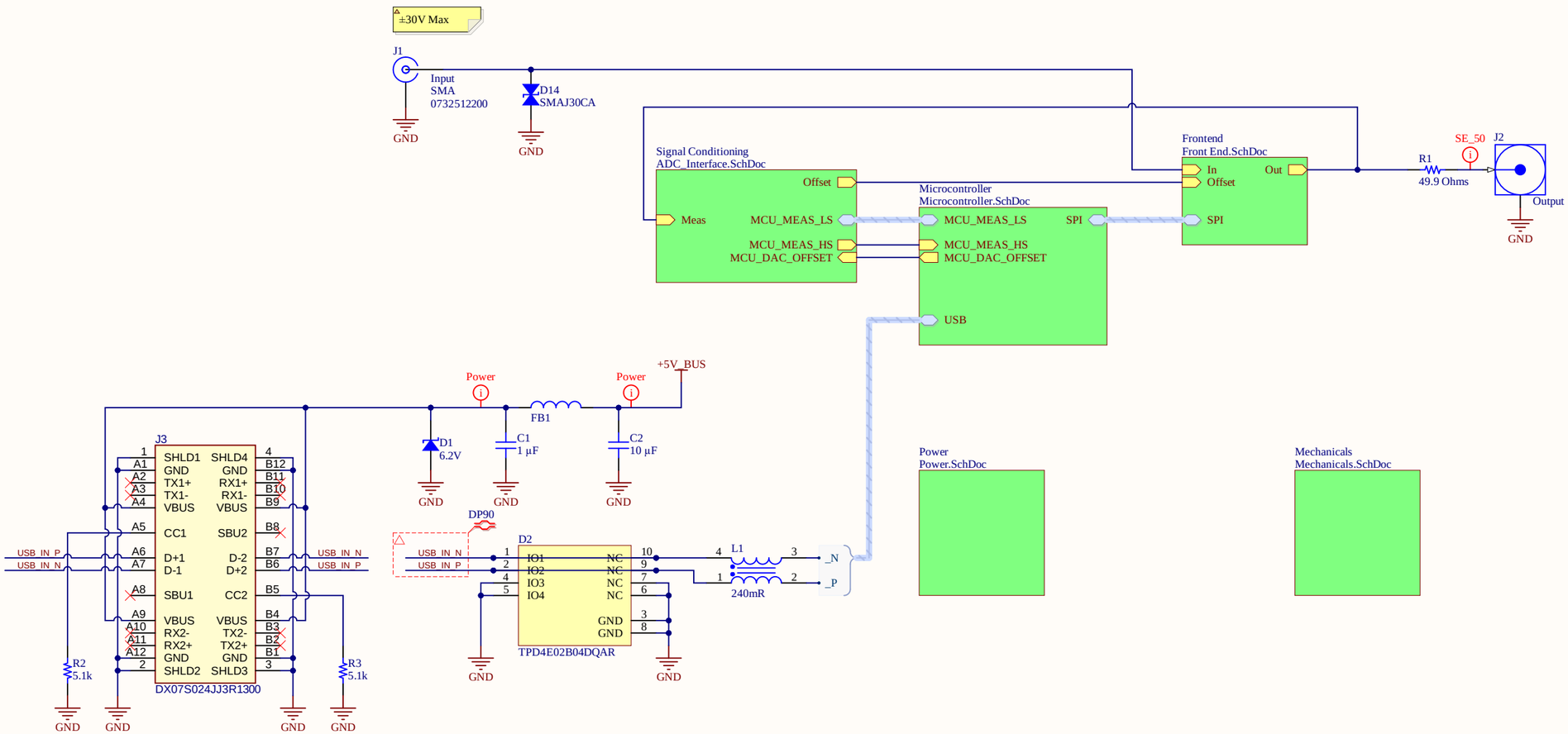

Title: Cover Sheet	Variant: 01
Project: Power Rail Probe	Revision:A01
Part Number: FL-0004	
Customer: Public Release	
Date: 9/16/2024	Sheet 1 of 6

©2024 Flycatcher Labs - All Rights Reserved

Flycatcher

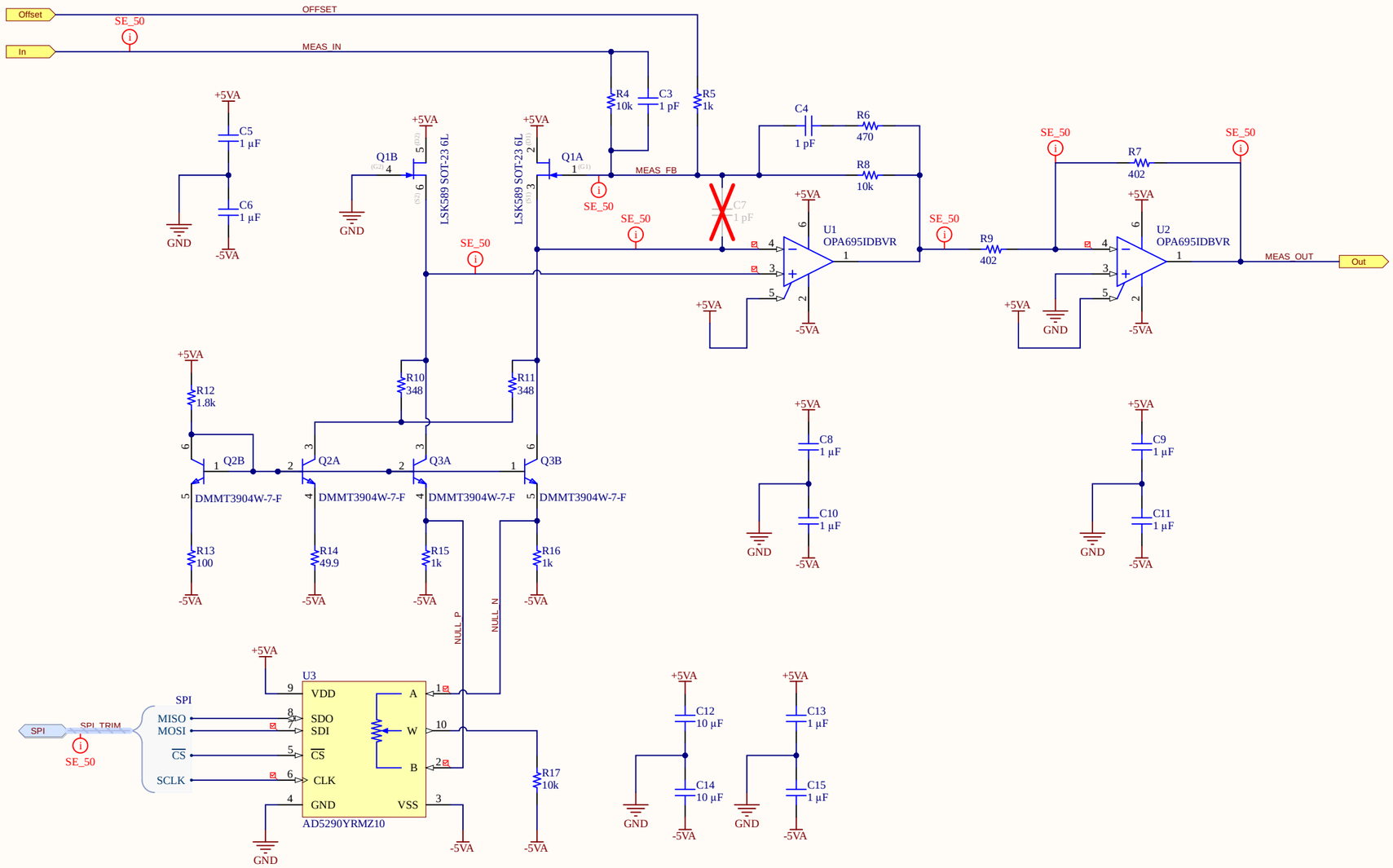

Title: Front End	Variant: 01
Project: Power Rail Probe	Revision:A01
Part Number: FL-0004	
Customer: Public Release	
Date: 9/16/2024	Sheet 2 of 6

©2024 Flycatcher Labs - All Rights Reserved

Flycatcher

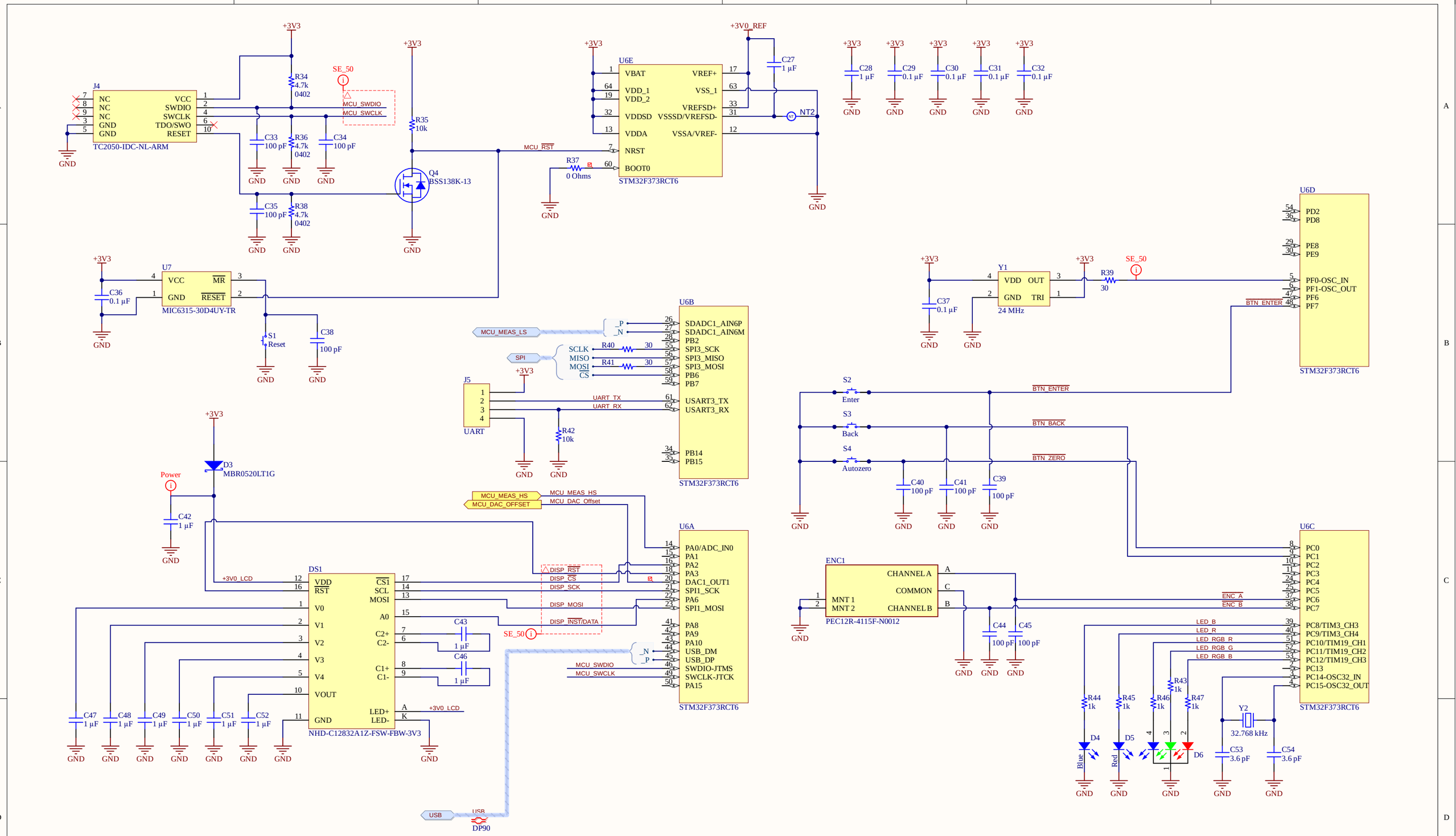

Title: Microcontroller and HMI	Variant: 01
Project: Power Rail Probe	Revision:A01
Part Number: FL-0004	
Customer: Public Release	
Date: 9/16/2024	Sheet 3 of 6

©2024 Flycatcher Labs - All Rights Reserved

Flycatcher

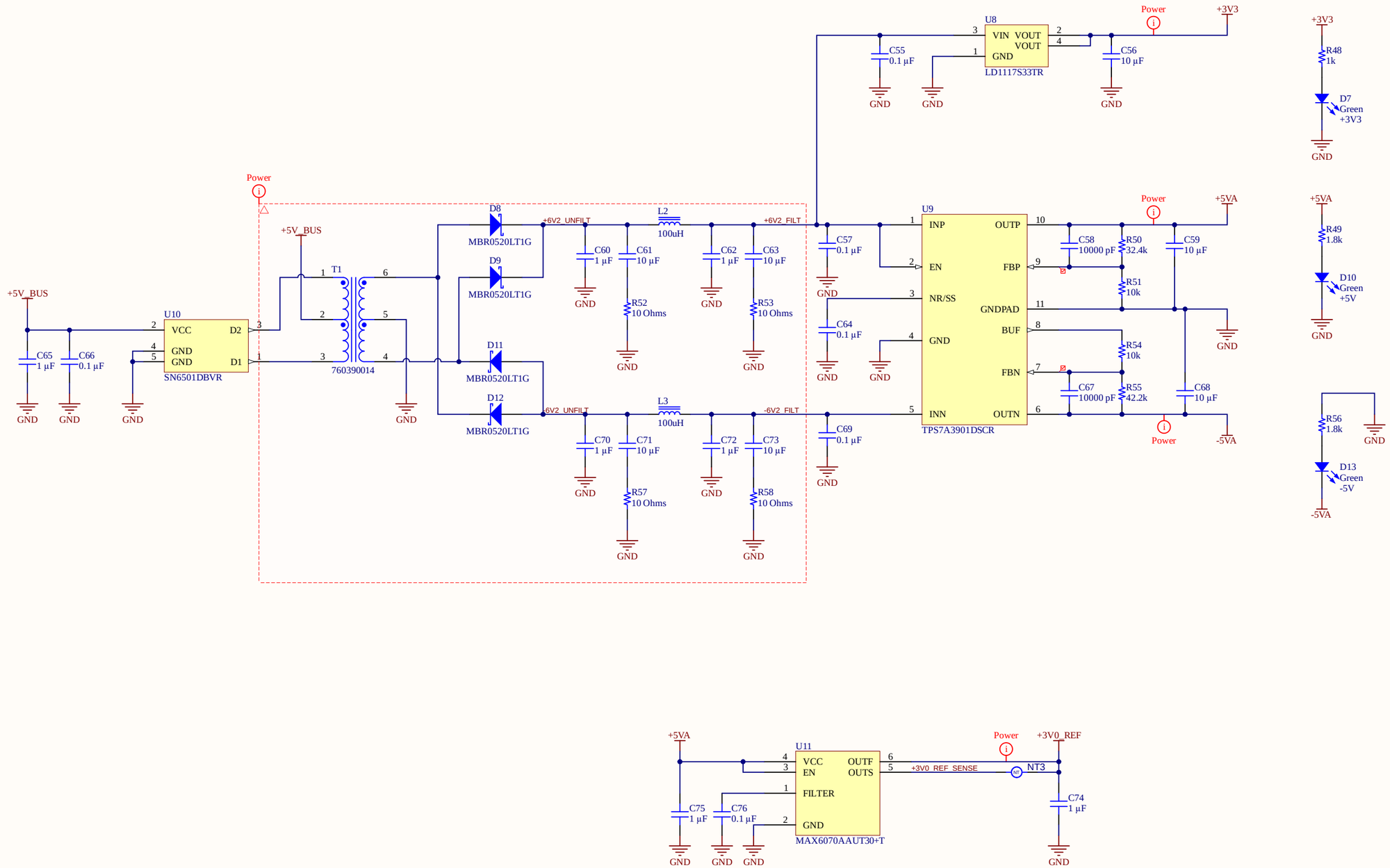

Title: Power Supplies	Variant: 01
Project: Power Rail Probe	Revision:A01
Part Number: FL-0004	
Customer: Public Release	
Date: 9/16/2024	Sheet 4 of 6

©2024 Flycatcher Labs - All Rights Reserved

Flycatcher

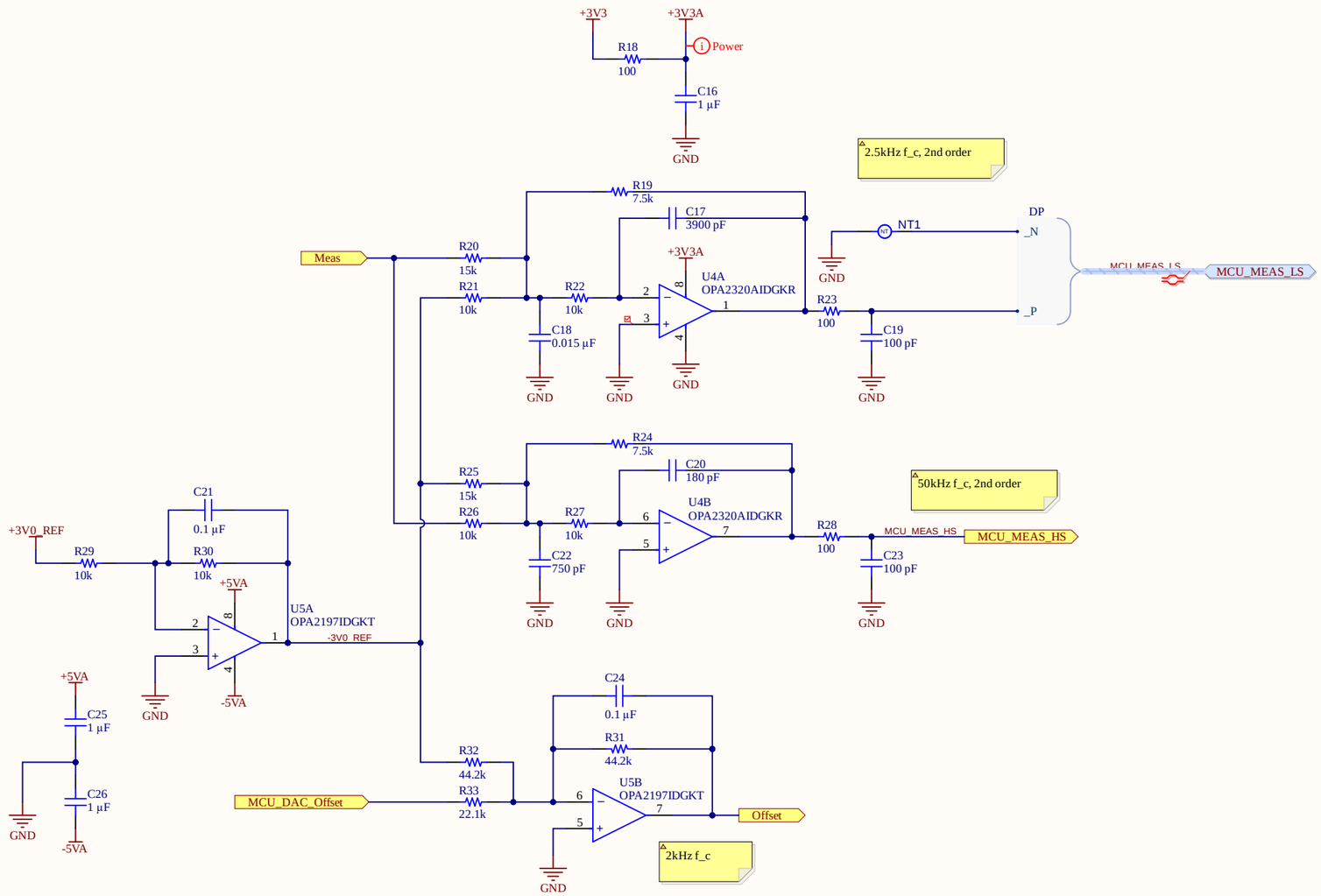

Title: ADC and DAC Signal Conditioning	Variant: 01
Project: Power Rail Probe	Revision:A01
Part Number: FL-0004	
Customer: Public Release	
Date: 9/16/2024	Sheet 5 of 6

©2024 Flycatcher Labs - All Rights Reserved

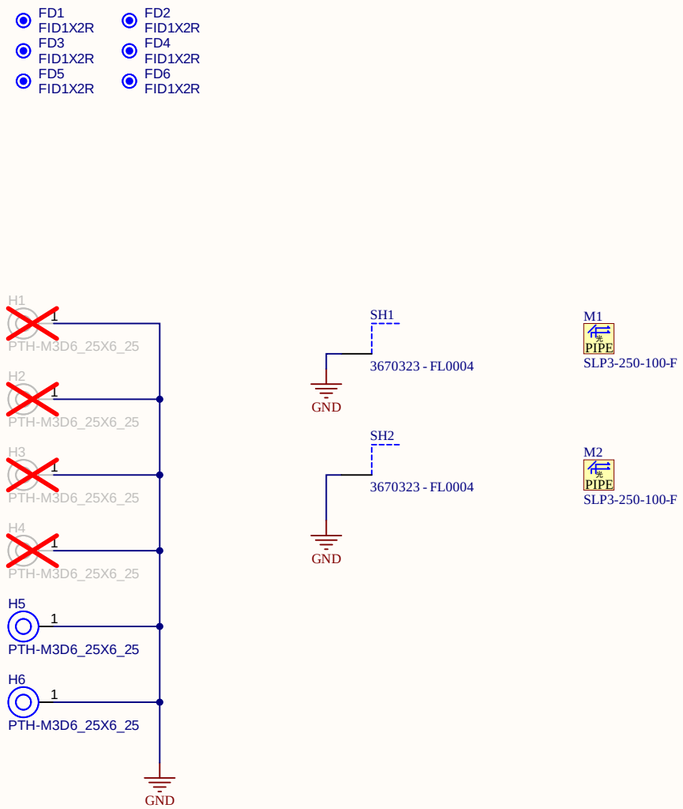

Title: Mechanicals	Variant: 01
Project: Power Rail Probe	Revision:A01
Part Number: FL-0004	
Customer: Public Release	
Date: 9/15/2024	Sheet 6 of 6

©2024 Flycatcher Labs - All Rights Reserved