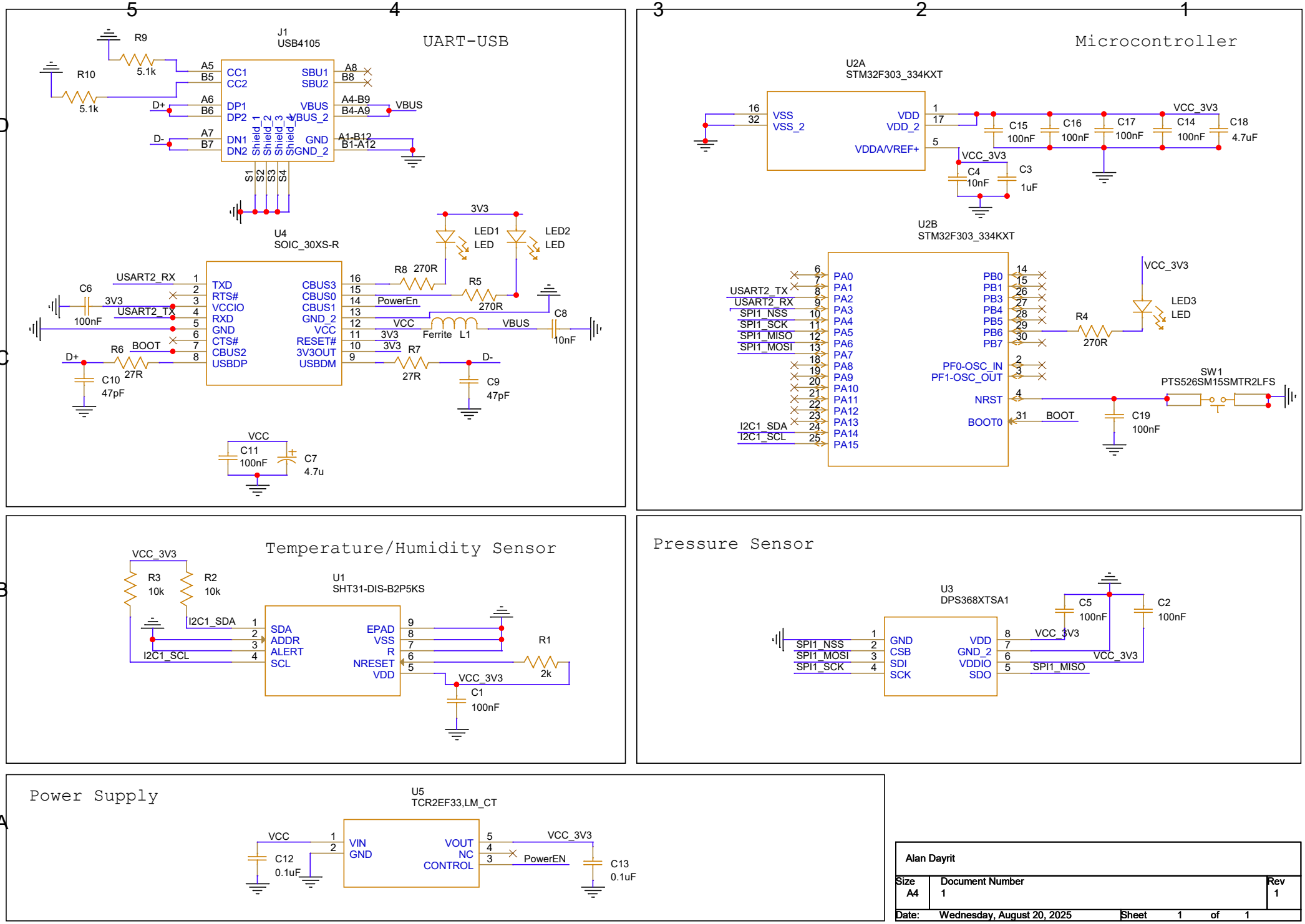
UART-USB
J1
USB4105
R9
5.1k
R10
5.1k
CC1
CC2
DP1
DP2
DN1
DN2
SBU1
SBU2
VBUS
VBUS_2
GND
GND_2
Shield_1
Shield_2
Shield_3
Shield_4
A5
B5
A6
B6
A7
B7
A8
B8
A4-B9
B4-A9
A1-B12
B1-A12
D+
D-
VBUS
S1
S2
S3
S4
U4
SOIC_30XS-R
TXD
RTS#
VCCIO
RXD
GND
CTS#
CBUS2
USBDP
CBUS3
CBUS0
CBUS1
GND_2
VCC
RESET#
3V3OUT
USBDM
USART2_RX
USART2_TX
3V3
C6
100nF
BOOT
R6
27R
C10
47pF
PowerEn
VCC
3V3
R8 270R
R5
270R
LED1
LED
LED2
LED
Ferrite L1
VBUS
C8
10nF
R7
27R
C9
47pF
VCC
C11
100nF
C7
4.7u
Microcontroller
U2A
STM32F303_334KXT
VSS
VSS_2
VDD
VDD_2
VDDA/VREF+
VCC_3V3
C15
100nF
C16
100nF
C17
100nF
C14
100nF
C18
4.7uF
C4
10nF
C3
1uF
U2B
STM32F303_334KXT
PA0
PA1
PA2
PA3
PA4
PA5
PA6
PA7
PA8
PA9
PA10
PA11
PA12
PA13
PA14
PA15
PB0
PB1
PB3
PB4
PB5
PB6
PB7
PF0-OSC_IN
PF1-OSC_OUT
NRST
BOOT0
USART2_TX
USART2_RX
SPI1_NSS
SPI1_SCK
SPI1_MISO
SPI1_MOSI
I2C1_SDA
I2C1_SCL
R4
270R
LED3
LED
SW1
PTS526SM15SMTR2LFS
C19
100nF
BOOT
Temperature/Humidity Sensor
VCC_3V3
R3
10k
R2
10k
U1
SHT31-DIS-B2P5KS
SDA
ADDR
ALERT
SCL
EPAD
VSS
R
NRESET
VDD
I2C1_SDA
I2C1_SCL
R1
2k
VCC_3V3
C1
100nF
Pressure Sensor
U3
DPS368XTSA1
GND
CSB
SDI
SCK
VDD
GND_2
VDDIO
SDO
SPI1_NSS
SPI1_MOSI
SPI1_SCK
SPI1_MISO
VCC_3V3
C5
100nF
C2
100nF
Power Supply
U5
TCR2EF33,LM_CT
VIN
GND
VOUT
NC
CONTROL
VCC
C12
0.1uF
VCC_3V3
PowerEN
C13
0.1uF
Alan Dayrit
Size
A4
Document Number
1
Rev
1
Date:
Wednesday, August 20, 2025
Sheet
1
of
1