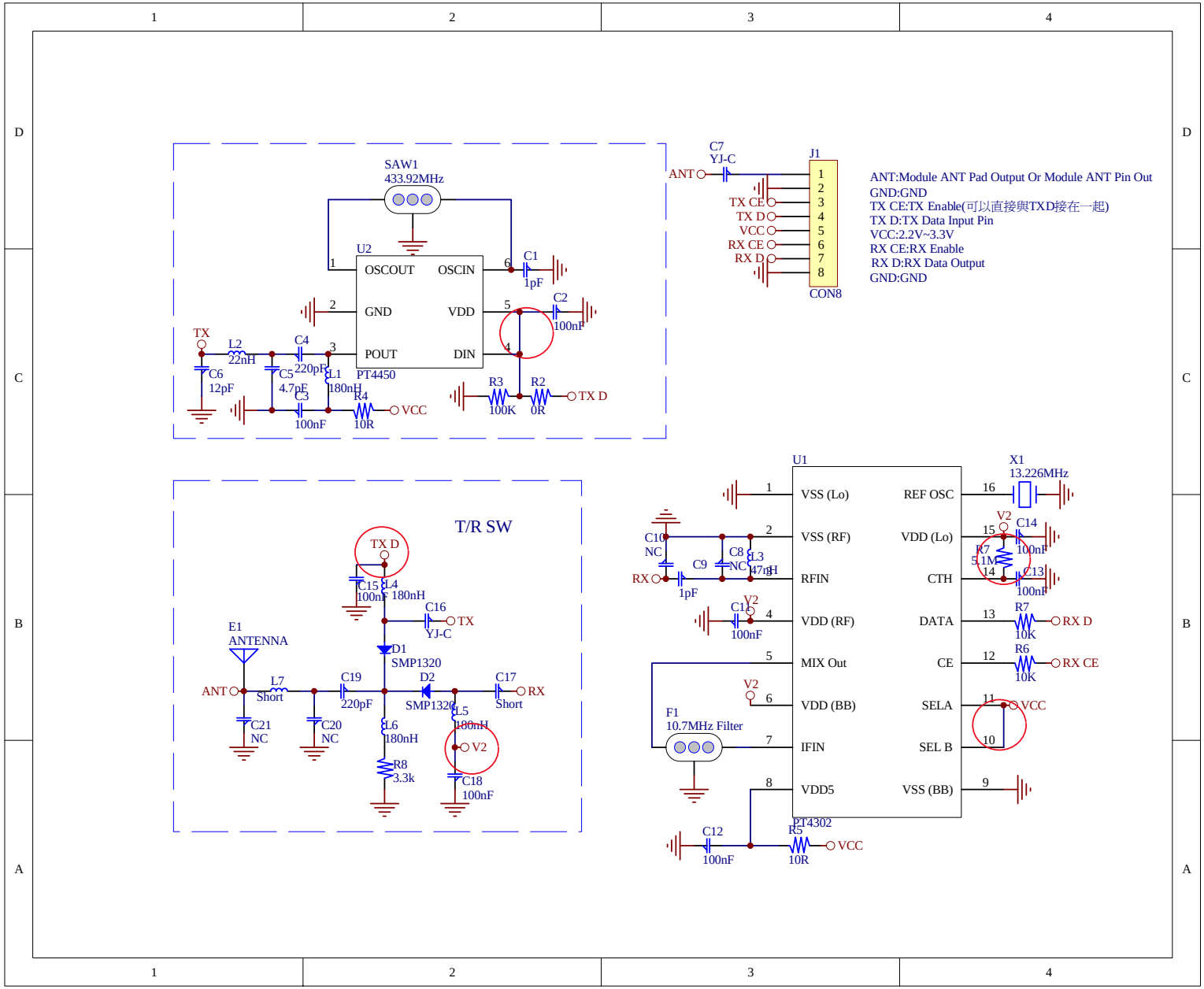
SAW1
433.92MHz
U2
OSCOUT
OSCIN
GND
VDD
POUT
DIN
PT4450
C1
1pF
C2
100nF
TX
L2
22nH
C4
220pF
C5
4.7pF
L1
180nH
C6
12pF
C3
100nF
R4
10R
VCC
R3
100K
R2
0R
TX D
C7
YJ-C
ANT
J1
TX CE
TX D
VCC
RX CE
RX D
CON8
ANT:Module ANT Pad Output Or Module ANT Pin Out
GND:GND
TX CE:TX Enable(可以直接與TXD接在一起)
TX D:TX Data Input Pin
VCC:2.2V~3.3V
RX CE:RX Enable
RX D:RX Data Output
GND:GND
T/R SW
TX D
C15
100nF
L4
180nH
C16
YJ-C
TX
E1
ANTENNA
D1
SMP1320
ANT
L7
Short
C19
220pF
D2
SMP1320
C17
Short
RX
C21
NC
C20
NC
L6
180nH
L5
180nH
V2
R8
3.3k
C18
100nF
U1
VSS (Lo)
VSS (RF)
RFIN
VDD (RF)
MIX Out
VDD (BB)
IFIN
VDD5
REF OSC
VDD (Lo)
CTH
DATA
CE
SELA
SEL B
VSS (BB)
PT4302
X1
13.226MHz
C14
100nF
R7
5.1M
C13
100nF
C10
NC
C9
C8
NC
L3
47nH
RX
1pF
C11
100nF
R7
10K
RX D
R6
10K
RX CE
VCC
F1
10.7MHz Filter
C12
100nF
R5
10R
VCC